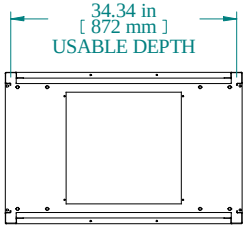

SECTION A-A

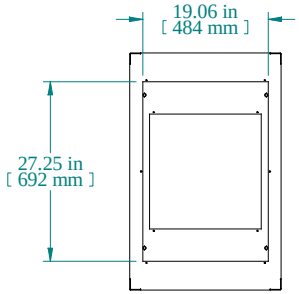

TOP VIEW

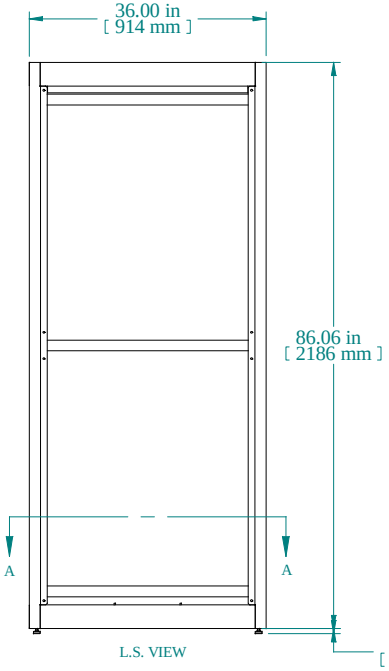

L.S. VIEW

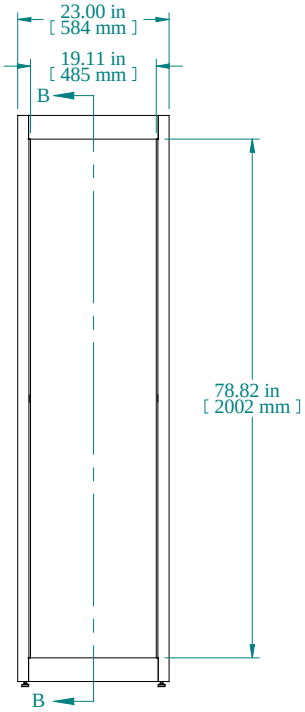

FRONT VIEW

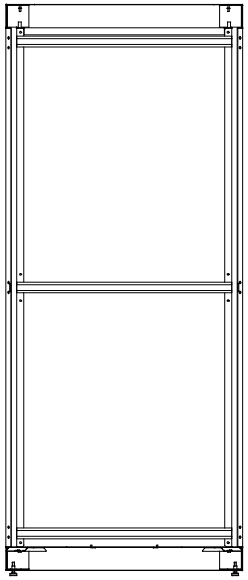

SECTION B-B

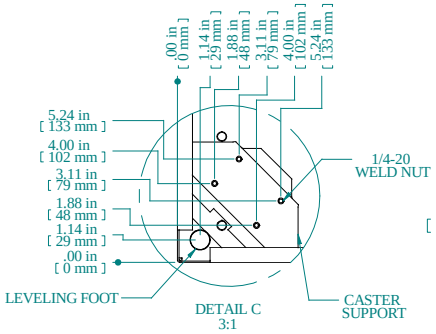

DETAIL C
3:1

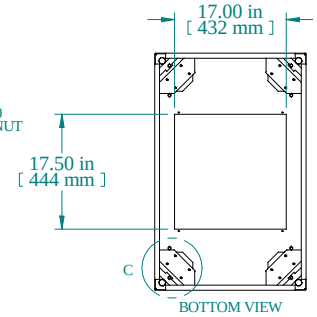

BOTTOM VIEW

PART NUMBERS	
C2F197836BK1	PAINTED BLACK TEXTURED
C2F197836CG1	PAINTED CONT. GRAY TEXTURED
C2F197836LG1	PAINTED RAL7035 TEXTURED

NOTES
Welded Assembly See Hammond Website for Frame Accessories

Data subject to change without notice. Isometric drawing not to scale.

HAMMOND MANUFACTURING™

www.hammondmfg.com

PART NO. C2F197836