used for: D-SUB

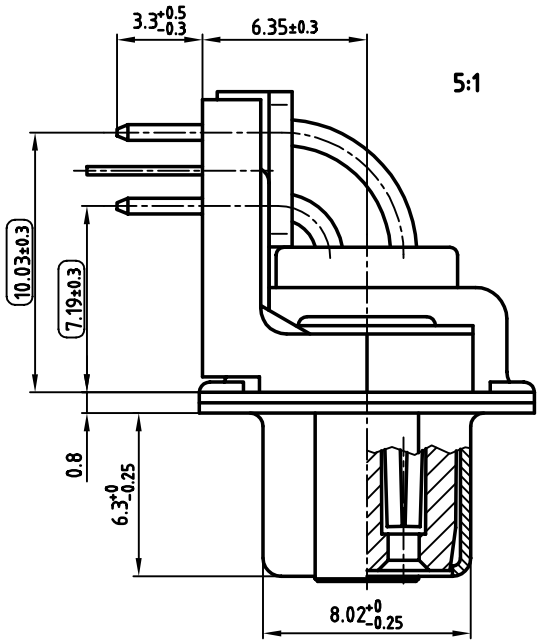

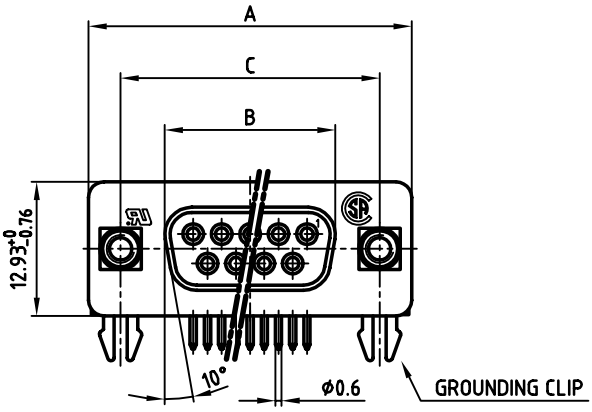

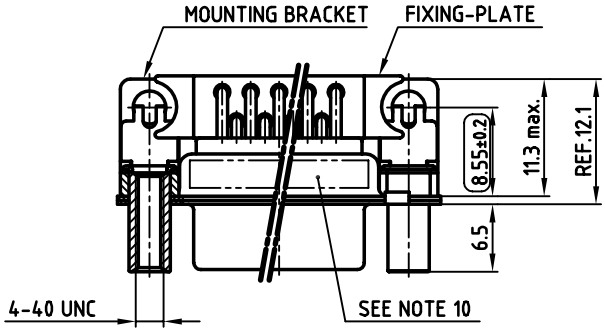

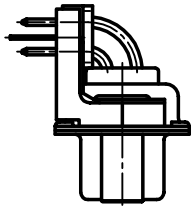

NOTES:

1. METALSHELLS: STEEL; min. 320µ" TIN
2. INSULATORS: PBT GF UL 94 V-0, BLACK
3. CONTACTS: COPPER ALLOY
   PLATING: 8µ" HARD GOLD OVER min. 50µ" NICKEL
4. MOUNTING BRACKET: PBT GF UL 94 V-0, BLACK
5. THREADED LOCK: COPPER ALLOY; min. 200µ" TIN over 80µ" NICKEL
6. GROUNDING CLIP: COPPER ALLOY; min. 200µ" TIN over 80µ" NICKEL
   PCB-HOLE: Ø3.1±0.1; PCB THICKNESS 1.6mm
7. FIXING-PLATE: PBT GF UL 94 V-0, BLACK
8. P.C.B. HOLE DRILLINGS ON DRAWING NO.: 16K1IIUA
9. MAXIMUM TORQUE VALUE FOR THREAD: 6" LBS
10. CONNECTOR IS PART MARKED: PART-NO. CONEC Y/WW
11. ( ) = CHECK DIMENSION

POS.	A -0.76	B -0.25	C	PART NO.
9	31.19	16.46	25.00 +0.12 -0.13	**164A18889X**
15	39.52	24.79	33.30 +0.15 -0.10	**164A18899X**
25	53.42	38.50	47.04 ±0.13	**164A18909X**
37	69.70	54.96	63.50 ±0.13	**164A18919X**

Directive 2002/95/EC „RoHS" Compliant

APPROVAL # FREIGABE # DEBLOCAGE # AUTOR/ZACION # APPROVAL

CUSTOMER APPROVAL DATE:

NAME: TITLE:

COMPANY NAME:

APPROVAL # FREIGABE # DEBLOCAGE # AUTOR/ZACION # APPROVAL

THIS DRAWING MAY NOT BE COPIED OR REPRODUCED IN ANY WAY, AND MAY NOT BE PASSED ON TO A THIRD PARTY WITHOUT WRITTEN PERMISSION. OWNERSHIP AND COPYRIGHT OF CONEC GmbH

DO NOT ALTER CAD DRAWING BY HAND

rev.	description	date	name

tolerance

dim. in mm

2003	date	name
drawn	22.09.	Lehmenkühler
appd.	22.09.	Mickenbecker
norm	DIN 41652	
d-old		

CONEC®

scale: 2:1 (5:1)

material: SEE NOTES

title:

D-SUB FEMALE 90°

9-37pos. 0.318inch

mounting bracket,threaded lock,grounding clip

dwg no: AutoCAD 2000 DIN-A 3

16K1A1017 sh: 1/1

part no: SEE TABLE