THIS COPY IS PROVIDED ON A RESTRICTED BASIS AND IS NOT TO BE USED IN ANY WAY DETRIMENTAL TO THE INTERESTS OF PANDUIT CORP.

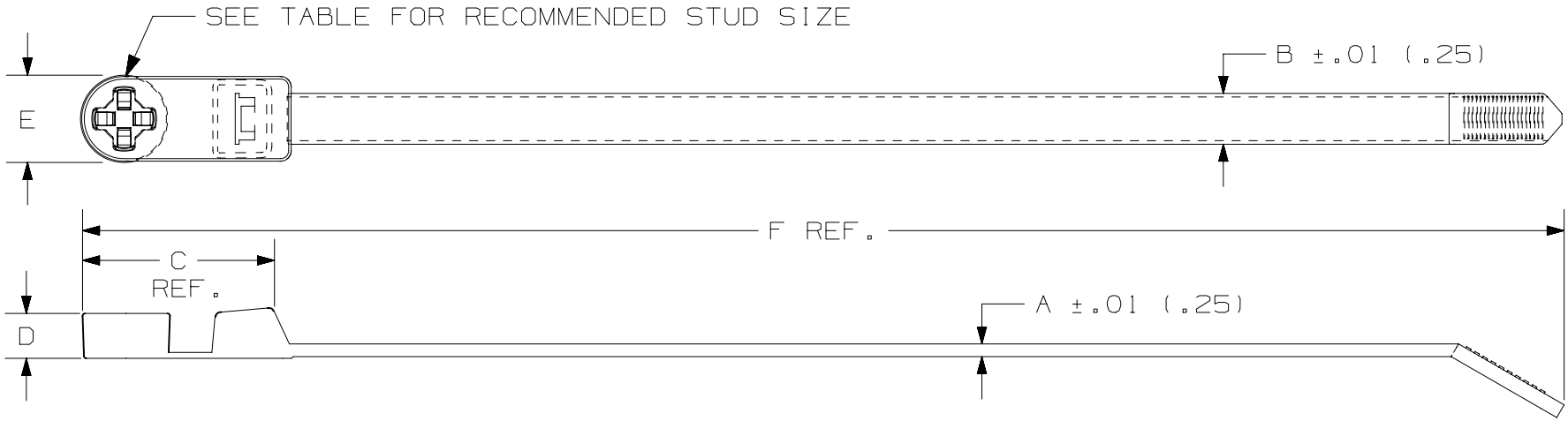

PANDUIT PART NO. *	BUNDLE DIA. MIN. IN (mm)	BUNDLE DIA. MAX. IN (mm)	A In (mm)	B In (mm)	C In (mm)	D In (mm)	E In (mm)	F In (mm)	MIN. LOOP TENSILE lbs (N)	CROSS-SECTION	RECM. STUD SIZE STUD	RECM. STUD SIZE LENGTH (min.)	WEIGHT lbs/100pcs (g)
PLST2HS25	.18 (4.8)	2.00 (50.8)	.075 (1.9)	.300 (7.6)	.94 (23.9)	.265 (6.7)	.515 (13.1)	8.2 (208)	120 (534)	HEAVY	1/4-20	.25	.914 (415)
PLST4HS25	.18 (4.8)	4.00 (101.6)	.075 (1.9)	.300 (7.6)	.94 (23.9)	.265 (6.7)	.515 (13.1)	15.3 (389)	120 (534)	HEAVY	1/4-20	.25	1.44 (654)

NOTES:
*1) SEE panduit.com FOR PART NUMBER SUFFIX DESIGNATION FOR PACKAGE SIZE AND PART COLOR.

REV	DATE	BY	CHK	APR	DESCRIPTION	ECN
2	3/26/14	BWG	MPH	JADE	ADDED PLST2H.	27185/02
1	10-22-01	JABO	SP	SP	REMOVED PLST2H & 3H, PARTS OBSOLETE	27185/01

TITLE
STUD MOUNT CABLE TIE
PLST2/4H SERIES
CUSTOMER DRAWING

ITEM REVISION NAME: SS_27185_00/AB
DATASET FILE NAME: SS_27185_02/A

UNLESS OTHERWISE SPECIFIED, DIMENSIONAL TOLERANCES ARE: IN [mm]
.X ± ---- .XXX ± .020(.5)
.XX ± .02(.5) ANGLES ± ----
THIRD ANGLE PROJECTION

MATERIAL: HEAT STABILIZED NYLON 6.6

DRAWING NUMBER: SS-27185

DRAWN BY	DATE	CHK	SCALE	SHT 1 OF 1	SIZE
JABO	11-11-98	RCRO	NONE		A