THIS DRAWING IS UNPUBLISHED.
VERTRAULICHE UNVEROEFFENTLICHTE ZEICHNUNG
© COPYRIGHT 2012 Tyco Electronics AMP GmbH
RELEASED FOR PUBLICATION - 2012
FREI FUER VEROEFFENTLICHUNG
ALL RIGHTS RESERVED.
ALLE RECHTE VORBEHALTEN.

MATED WITH
PASSEND ZU:
1355154

LOC	DIST
FM	-

PROJEKT NR.: (1A99-52188)

REVISIONS
AENDERUNGEN

P	LTR	DESCRIPTION BESCHREIBUNG	DATE	DWN	APVD
	A2	REVISED PER ECO-11-005150	21MAR2011	RK	HMR
	A3	ECR-11-010460	11MAY2011	KWE	B.F
	A4	ECR-12-006896	19APR2012	VP	B.F
			-		

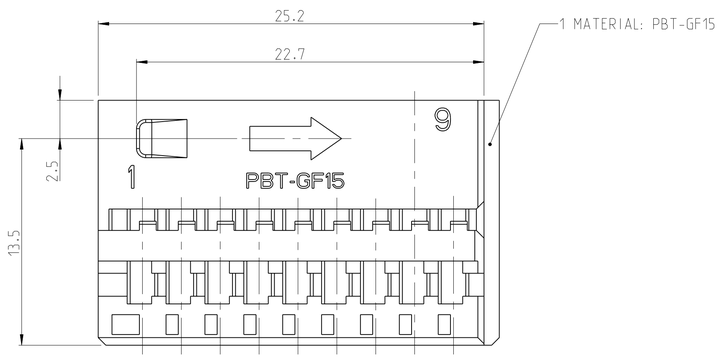

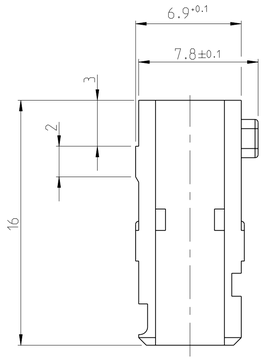

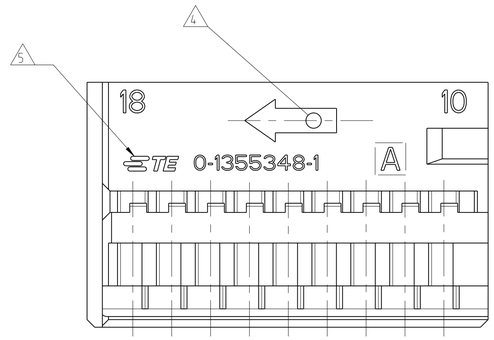

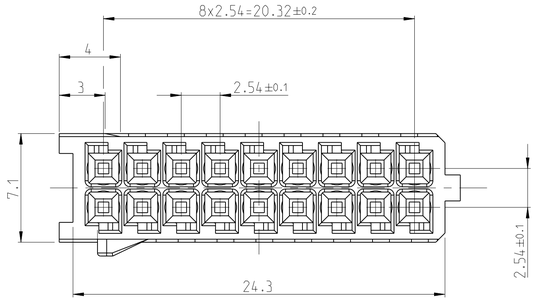

NOTES
Bemerkungen

1 ASSOCIATION SEE TABLE
Zuordnung siehe Tabelle

2 Produktspezifikation: 108-18157-1
PRODUCTSPECIFICATION:108-18157-1

3 WIRE SIZE RANGE 0.75 mm IN ALL CAVITIES POSSIBLE
BUT ONLY IN 4 CAVITIES PERMITTED
Drahtgroessenbereich 0.75 mm in allen Kammern moeglich,
jedoch nur in 4 Kammern zulaessig

4 CAVITY MARKING
Nestmarkierung

5 TE-LOGO
TE-Logo

	Tool 1 Werkzeug 1	Tool 2 Werkzeug 2
TE LOGO TE Logo 5	AMP	TE
Tool Number Werkzeugnummer		
Tool Cavity 1 Formnest 1	1	2.1
Tool Cavity 2 Formnest 2	2	2.2
Tool Cavity 3 Formnest 3	3	2.3
Tool Cavity 4 Formnest 4	4	2.4

CUSTOMER PART NO	PART NO	REV	PCS	MATERIAL	SURFACE COLOUR	DESCRIPTION
-	-	-	-	-	-	-
-	-	-	-	-	-	-
-	-	-	-	-	-	-
-	-	-	-	-	-	-

TE BESTELL-NR. ORDER NO.	REV.	COD. KOD.	POS.	QTY. STK.	DESCRIPTION BENENNUNG	OBERFLAECHE SURFACE / FARBE/COLOUR	GRAMM / GEWICHT WEIGHT	SUITABLE FOR/PASSEND ZU: SHIELD/Abdeckkappe / TE CONNECTIVITY	
0-1355348-1	A	/	1	1	SOCKET. HOUSING Buchsengehaeuse	BLACK schwarz	1.7	~~4-1355350-1~~ ~~3-1355350-1~~ 2-1355350-1 1-1355350-1	NOT YET TOOLED

4805 (3/11)

Pro/ENGINEER DRAWING

THIS DRAWING IS A CONTROLLED DOCUMENT.
DIMENSIONING AND TOLERANCING PER GPS (ISO STANDARDS)

DIMENSIONS: MASSEINHEITEN: mm

TOLERANCES UNLESS OTHERWISE SPECIFIED: ALLGEMEINTOLERANZEN
0 PLC ±0.2
1 PLC ±0.1
2 PLC ±0.2
3 PLC ±.
4 PLC ±.
ANGLES/WINKEL ±2°

MATERIAL: PBT GF15 703457-2
FINISH/OBERFLAECHE/FARBE: - -

DWN O.Frank 31JAN2000
CHK B.Fieberling 31JAN2000
APVD -
PRODUCT SPEC PRODUKTSPEZ. -
APPLICATION SPEC VERARBEITUNGSSPEZ. -
WEIGHT GEWICHT -

TE Connectivity

NAME
MICRO QUADLOK SYSTEM, SOCKET HOUSING,18POS.
Micro Quadlok System, Buchsengehaeuse,18POS

SIZE A1 | CAGE CODE 00779 | DRAWING NO ZEICHNUNGS-NR. C-1355348 | RESTRICTED TO NUR FUER -

CUSTOMER DRAWING /KUNDENZEICHNUNG | SCALE MASSSTAB 5:1 | SHEET BLATT 1 OF VON 1 | REV A4
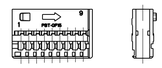
M 1:1