NOTES:

1. ONLY THE ITEMS WITH QUANTITIES SPECIFIED ON PARTS LIST ARE USED ON THIS APPLICATOR.

2. USED IN PLACE OF ITEM 38 WHEN INSULATION CRIMP IS NOT USED.

3. GUARD MUST BE IN PLACE WHEN OPERATING APPLICATOR IN AMP-O-LECTRIC PRESS.

4. CUT TO LENGTH AT ASSY.

5. SEE DWGS FOR COMPONENTS.

6. QTY IN INCHES.

KEY:

■ RECOMMENDED SPARE PARTS. CUSTOMER RESPONSIBLE FOR REPLACEMENT.

▲ LUBRICATE DAILY USING NO. 20 MACHINE OIL.

⬢ GREASE LIGHTLY.

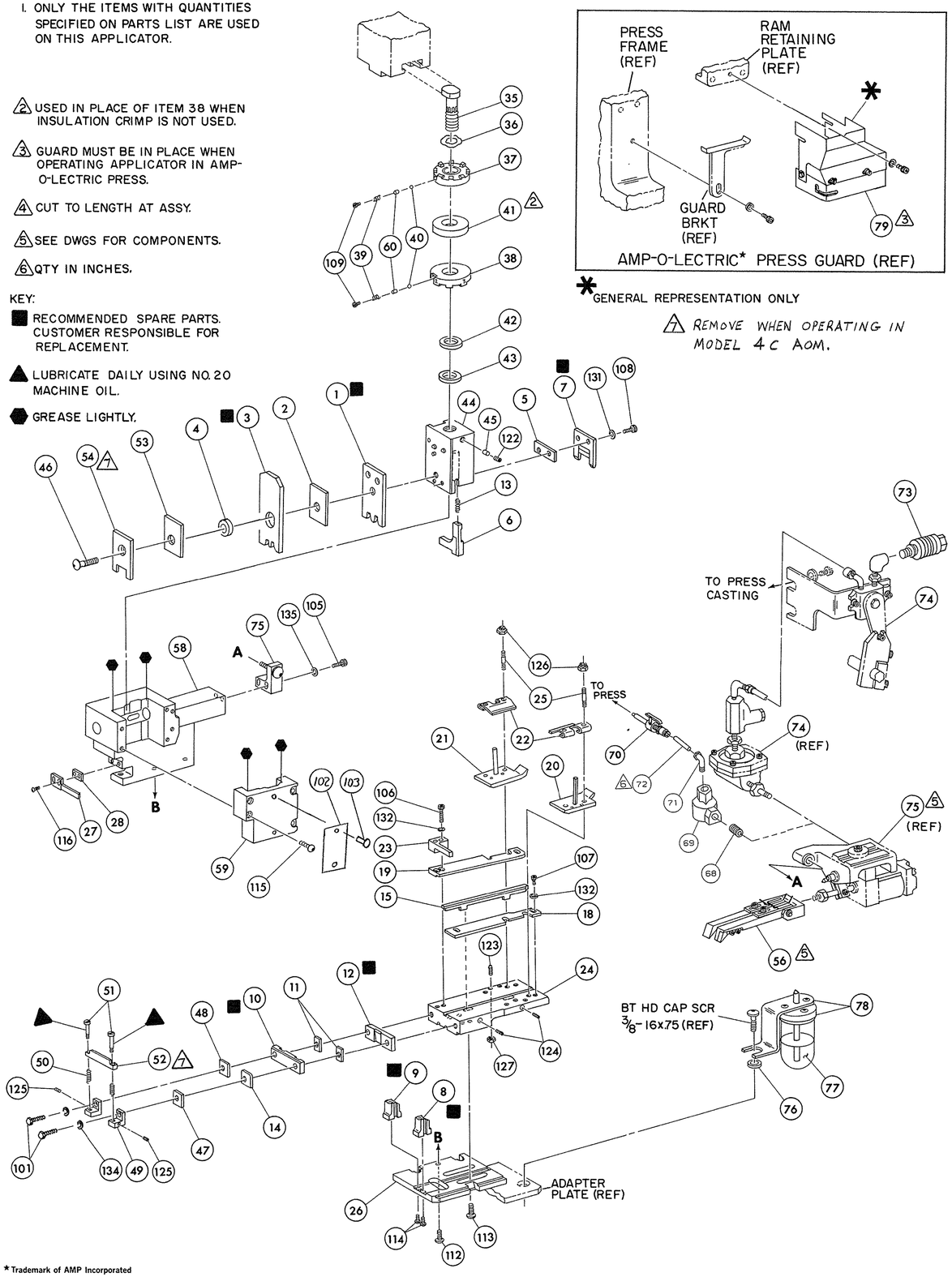

QTY	PART NO	DESCRIPTION	ITEM NO
			145
			144
			143
			142
			141
			140
			139
			138
			137
			136
2	21024-5	WASHER, LOCK (NO 10) AIR FEED ASSY	135
2	21024-5	WASHER, LOCK (NO 10) SHEAR PLATES	134
			133
	21024-4	WASHER, LOCK (NO 8) STRIP GUIDE	132
2	21024-4	WASHER, LOCK (NO 8) SHEAR BLADE	131
			130
			129
			128
4	21018-6	NUT, HEX MACH (8-32) DRAG ADJ SCREW	127
4	21022-2	NUT, HEX SELF-LKG (8-32) DRAG STUD	126
2	1-21008-9	SCR, SKT SET (4-40 x .12) (LOC-WEL) DEP. HOLDER	125
2	3-21006-1	SCR, SKT SET (6-32 X .38) CTR STR GUIDE	124
4	5-21061-5	SCR, SKT SET CONE POINT (8-32 X .88) DRAG	123
1	21009-2	SCR, SKT SET (1/4-20 X 25) (LOC-WEL) RAM	122
			121
			120
			119
			118
			117
2	2-21002-2	SCR, BTN HD SKT CAP (8-32 X .50) STRIPPER	116
4	3-21002-1	SCR, BTN HD SKT CAP (10-32 X 1.00) HSG CAP	115
2	22733-8	SCR, BTN HD SKT CAP (8-32 X .38) (LOC-WEL) ANVIL	114
4	3-21002-3	SCR, BTN HD SKT CAP (1/4-20 X .50) STR GDE PL	113
3	17177-1	SCR, BTN HD SKT CAP (1/4-20 X .62) BASE PL	112
			111
			110
2	23030-1	SCR, SKT HD CAP (6-32 X .25) (LOC-WEL) CP DISC	109
2	2-21000-7	SCR, SKT HD CAP (8-32 X .50) SHEAR BLADE	108
3	2-21000-6	SCR, SKT HD CAP (8-32 X .38) STRIP GUIDE	107
2	2-21000-9	SCR, SKT HD CAP (8-32 X .75) STRIP GUIDE	106
2	3-21000-7	SCR, SKT HD CAP (10-32 X .75) AIR FEED ASSY	105
			104
2	21017-2	SCR, DRIVE (#2 X .19) ID PLATE	103
1	461264-1	PLATE, ID	102
2	4-22603-0	SCR, HEX HD CAP (10-32 X 1.00) SHEAR PLATE	101
REF	455750-6	GUARD ASSY. △3	79
—		LUBRICATOR ASSY	78
—	455985-1	OIL, LUBRICATING	77
—	454406-1	SPACER, LUB BRACKET	76
1	460277-3	AIR FEED ASSY △3	75
—	692655-1	AIR FEED VALVE ASSY △3	74
—	24042-2	VALVE, SHUT OFF	73
15"	27319-4	TUBING, PLASTIC △6	72
1	22294-6	ELBOW, PLASTIC TUBING	71
1	23238-1	INSERT, COUPLING	70
1	223747-1	VALVE, QUICK EXHAUST	69
1	22304-1	NIPPLE, HEX, 1/8 NPT X 1/8 NPT	68
			67
			66
			65
			64
			63
—	694925-4	REEL BRKT CONVERSION ASSY	62
			61
1	690603-1	SPRING ASSIST	60

QTY	PART NO	DESCRIPTION	ITEM NO
			59
			58
			57
1	460680-3	FEED FINGER ASSY △3	56
			55
1	461172-1	DEPRESSOR, WIRE △7	54
1	2-455888-5	SPACER, WIRE DEPRESSOR	53
1	461171-1	SUPPORT, WIRE △7	52
2	461170-1	SCREW, WIRE SUPPORT	51
2	22280-3	SPRING, WIRE SUPPORT	50
2	461173-1	HOLDER, WIRE SUPPORT	49
1	3-240645-4	SPACER, WIRE SUPPORT (LEFT)	48
—		SPACER, WIRE SUPPORT (RIGHT)	47
1	7-21002-9	BOLT, CRIMPER	46
1	690191-1	PLUG, NYLON	45
1	458266-1	RAM	44
1	690125-1	WASHER, LAMINATED	43
1	690124-1	WASHER, RAM	42
1	690223-1	SPACER, DISC △2	41
1	23241-6	BALL, STEEL	40
1	690170-1	SPRING, COMPRESSION	39
—		DISC, INSULATION	38
1	8-690141-1	DISC, WIRE	37
1	22480-5	WASHER, SPRING	36
1	690212-1	POST, RAM	35
			34
			33
			32
			31
			30
			29
1	3-690451-2	SPACER, STRIPPER	28
1	458265-1	STRIPPER	27
1	458263-1	PLATE, BASE	26
4	22354-7	DRAG, STUD	25
1	458262-1	PLATE, STRIP GUIDE	24
1	458261-1	PLATE, STRIP HOLD	23
2	461389-1	SPRING, DRAG	22
1	458260-1	DRAG, STOCK (LEFT)	21
1	458259-1	DRAG, STOCK (RIGHT)	20
1	458256-6	GUIDE, STRIP (LEFT)	19
1	458256-6	GUIDE, STRIP (RIGHT)	18
			17
			16
1	238175-7	GUIDE, CENTER STRIP	15
1	2-690481-0	SPACER, HOLD DOWN	14
1	23846-1	SPRING, HOLD DOWN	13
1	458255-1	PLATE, REAR SHEAR ■	12
—		SPACER, SHEAR PLATE	11
1	458254-4	PLATE, FRONT SHEAR ■	10
1	693302-6	ANVIL, LEFT ■	9
1	693302-6	ANVIL, RIGHT ■	8
1	458253-5	BLADE, SLUG ■	7
1	458252-1	HOLD DOWN, TERMINAL	6
1	2-238075-9	SPACER, SHEAR BLADE	5
—		SPACER, TUBULAR	4
—		CRIMPER, INSULATION ■	3
—		SPACER, INSULATION	2
1	2-458249-9	CRIMPER, WIRE ■	1

CRIMPING DATA

PAD LTR	CRIMP HEIGHT LEFT	CRIMP HEIGHT RIGHT	WIRE SIZE LEFT	WIRE SIZE RIGHT	WIRE RANGE	
A	.071		14		LEFT / RIGHT	18-14
B	.061		16		INSUL RANGE	
C	.055		18		LEFT / RIGHT	— " —
D	NOT USED					

CRIMP		SIZE	TYPE	CRIMP		SIZE	TYPE	FEED	
WIRE	LEFT / RIGHT	.100	F	INSUL	LEFT / RIGHT	— " —	— " —	LEFT / RIGHT	.700

PRESS REF — " — APPL INST A1 8046

REMARKS

AMPOMATOR
AIR-FEED
DUAL APPLICATOR

APPLICATOR WILL APPLY

61012
62931
1217530

REMARKS		NO	REV
		TO APPLY TERMINAL SPEC 114-2080	
APPL USED ON MACHINE PART NO	MACH SERIAL NO	DISTRIBUTION	
CUSTOMER NAME	APPL SERIAL NO	ORIGINAL	
ADDRESS	PURCHASE ORDER	CUSTOMER COPY	
CITY	ENG APP	FIELD ENG COPY	

P F	LTR	REVISION RECORD	APP	DATE	P F	LTR	REVISION RECORD	APP	DATE	P F	LTR	REVISION RECORD	APP	DATE
											C	ECR-06-004292	MH/TE	2-06
											B1	0150-0374-04	MH/TE	3-04
											B	0150-0849-00	CE	12-00
											A	ECN R-7694	DAC/CE	12/1/87

SET UP GAGE — " — 147A
DR 2-13-90 APP 2/27/91
CHK 2-27-90 REL 3/1/91
NAME MINIATURE QUICK CHANGE APPLICATOR END FEED, DUAL (.109 DIA. PIN RECEPT.)

AMP INCORPORATED Harrisburg, Pa.

LOC A | D | NO 466061-3 | REV C

DOC CODE 00773 | CUSTOMER AND ASSEMBLY DRAWING | RESTRICTED TO

DIST 66

THIS DRAWING IS A CONTROLLED DOCUMENT

DIS-DRAWING-CD-WRD-DS-0449 | RELEASED FOR PUBLICATION JUL 7, 1998
© COPYRIGHT 1998 BY AMP INCORPORATED. ALL RIGHTS RESERVED

* Trademark of AMP Incorporated

AMP 3324