PRODUCT No.	FINISH
92150-001	SEE NOTE 2
B 92150-001LF	SEE NOTE 5

REVISIONS				
REV	DESCRIPTION	ECN	BY	DATE
1	SKETCHED		KS	11/13/'93
A	RELEASED	J30180	KS	6/10/'93
B	REVISED	N05-0279	M.Z	10/28/'05

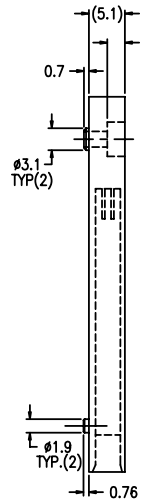

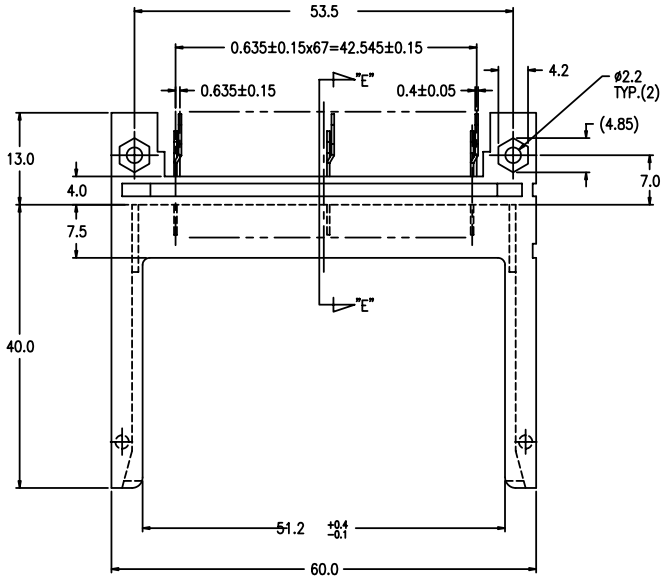

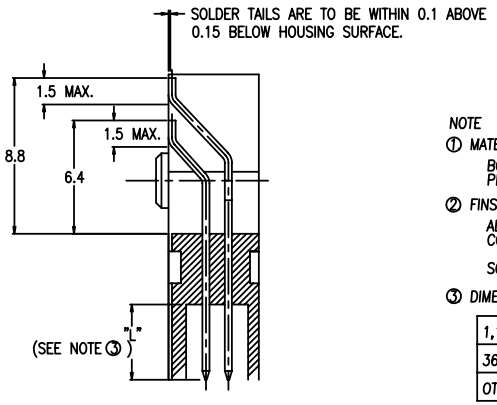

SECTION "E-E" (5/1)

NOTE

① MATERIAL

BODY : LCP UL94V-0 BLACK
PIN : PHOSPHOR BRONZE

② FINSH(PIN)

ALL OVER : Ni UNDER PLATING 0.5um THK MIN.
CONTACT AREA : Au 0.1um THK MIN.
OVER Pd/Ni 0.5um THK MIN.
SOLDER TAIL : Sn/Pb 2.5um THK MIN.

③ DIMENSION "L"

1,17,34,35,51,68PIN	5.0±0.1
36,67PIN	3.5±0.1
OTHERS	4.25±0.1

4. CARD SLOT AND PIN DIMENSIONS PER JEIDA/PCMCIA STANDARDS

⑤ FINSH(PIN)

ALL OVER : Ni UNDER PLATING 0.5 uM THK MIN.
CONTACT AREA : Au 0.1mm THK MIN.
OVER Pd/Ni 0.5 uM THK MIN.
SOLDER TAIL : Sn 2.5um THK MIN.

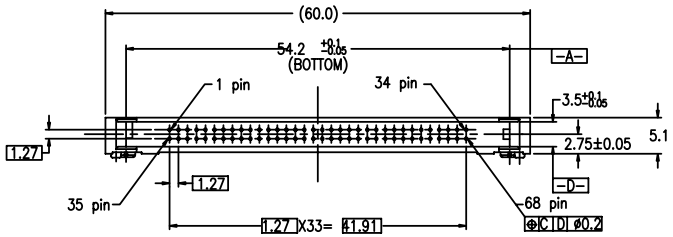

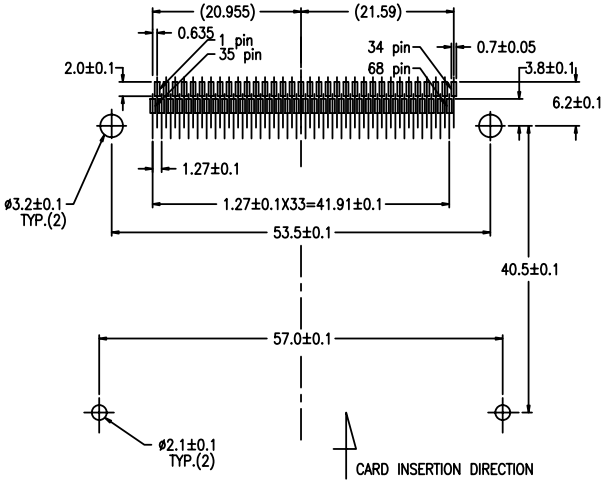

RECOMMENDED FOOT PRINT (MOUNTED SIDE)

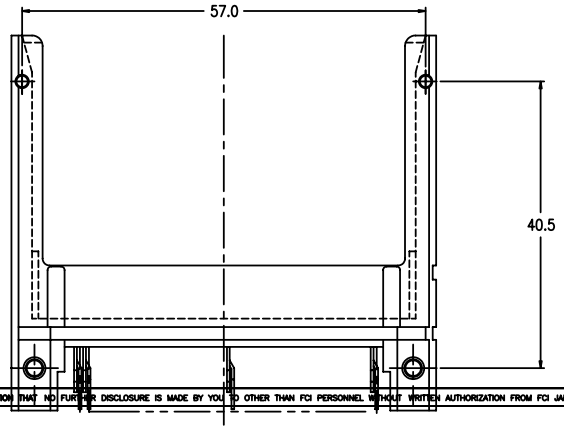

SHEET INDEX	ISSUE	B	B
	SH NO.	1	2

TOLERANCES UNLESS OTHERWISE SPECIFIED	
LINEAR	±0.3
ANGLES	

MAT: SEE NOTE ①
FINISH

DR: M.Hasegawa 7/19/'05
ENGR: M.Hasegawa 7/19/'05
CHK
APPD

CUSTOMER COPY
THIRD ANGLE PROJ
UNIT MM

FCI

TITLE: 68POS. HEADER ASS'Y JEIDA/PCMCIA TYPE I, II, III

PRODUCT FAMILY: 5ANF Header PCMCIA

SCALE	SIZE	DWG. NO.	REV	SHEET
2/1	C	92150	B	1 of 2

CODE: JP

DF-003A REV F

DO NOT SCALE PRINT THIS INFORMATION IS CONFIDENTIAL AND IS DISCLOSED TO YOU ON CONDITION THAT NO FURTHER DISCLOSURE IS MADE BY YOU TO OTHER THAN FCI PERSONNEL WITHOUT WRITTEN AUTHORIZATION FROM FCI JAPAN K.K.

PRODUCT No.	FINISH
92150-002	SEE NOTE 2
B 92150-002LF	SEE NOTE 5

REVISIONS				
REV	DESCRIPTION	ECN	BY	DATE
1	SKETCHED		KS	11/13/'92
A	RELEASED	J30180	KS	6/10/'93
B	REVISED	N05-0279	M.Z	10/28/'05

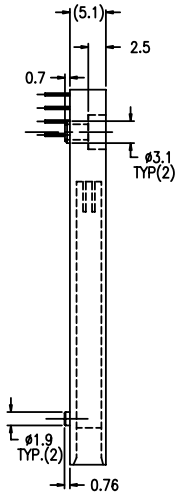

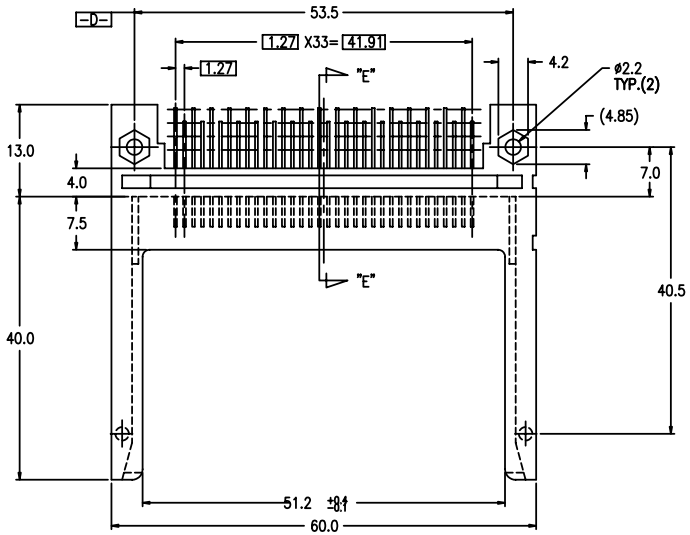

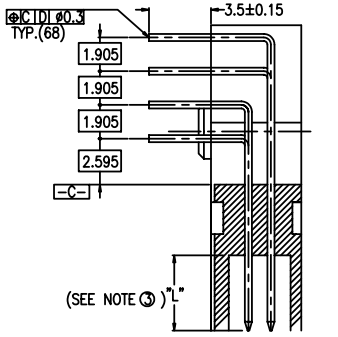

SECTION "E-E" (5/1)

NOTE

① MATERIAL

BODY : LCP UL94V-0 BLACK
PIN : PHOSPHOR BRONZE

② FINSH(PIN)

ALL OVER : Ni UNDER PLATING 0.5um THK MIN.
CONTACT AREA : Au 0.1um THK MIN.
OVER Pd/Ni 0.5um THK MIN.
SOLDER TAIL : Sn/Pb 2.5um THK MIN.

③ DIMENSION "L"

1,17,34,35,51,68PIN	5.0±0.1
36,67PIN	3.5±0.1
OTHERS	4.25±0.1

4. CARD SLOT AND PIN DIMENSIONS PER JEIDA/PCMCIA STANDARDS

⑤ FINSH(PIN)

ALL OVER : Ni UNDER PLATING 0.5 uM THK MIN.
CONTACT AREA : Au 0.1 uM THK MIN.
OVER Pd/Ni 0.5 uM THK MIN.
SOLDER TAIL : Sn 2.5um THK MIN.

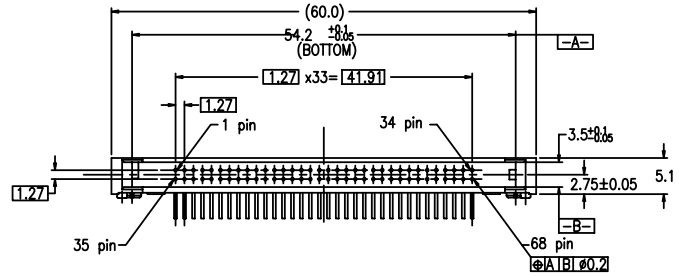

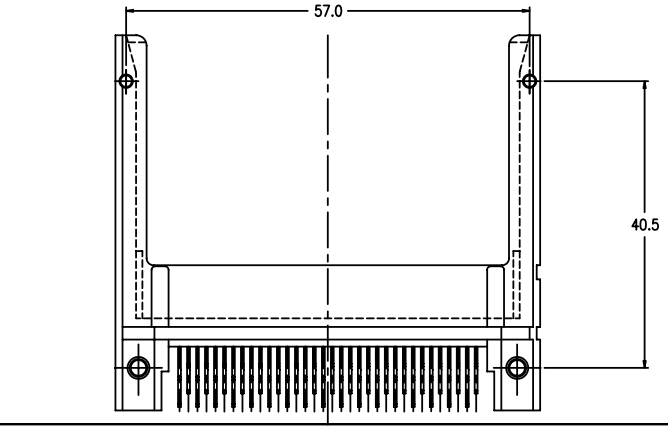

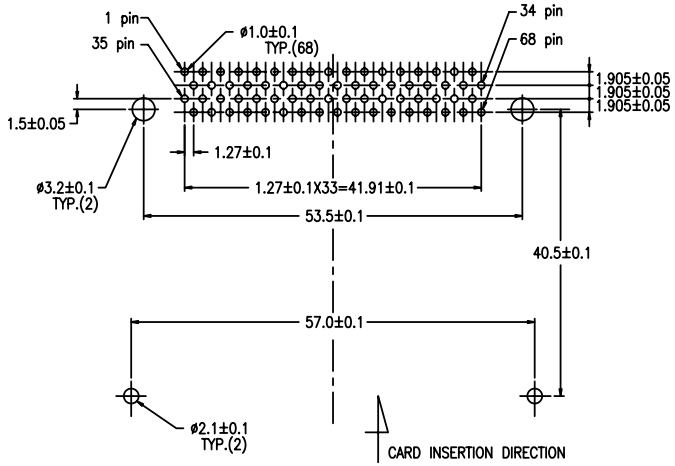

RECOMMENDED FOOT PRINT (MOUNTED SIDE)

SHEET INDEX	ISSUE					
	SH NO.					
TOLERANCES UNLESS OTHERWISE SPECIFIED		MAT SEE NOTE ①	DR M.Hasegawa	DATE 7/19/'05	CUSTOMER COPY	TITLE 68POS. HEADER ASS'Y JEIDA/PCMCIA TYPE I, II, III
LINEAR	±0.3	FINISH	ENGR M.Hasegawa	7/19/'05	THIRD ANGLE PROJ	PRODUCT FAMILY 5ANF Header PCMCIA / CODE JP
			CHK		UNIT MM	SCALE 2/1 / SIZE C / DWG. NO. 92150 / REV B / SHEET 2 OF
ANGLES			APPD			

FCI

DF-003A REV F

DO NOT SCALE PRINT THIS INFORMATION IS CONFIDENTIAL AND IS DISCLOSED TO YOU ON CONDITION THAT NO FURTHER DISCLOSURE IS MADE BY YOU TO OTHER THAN FCI PERSONNEL WITHOUT WRITTEN AUTHORIZATION FROM FCI JAPAN K.K.