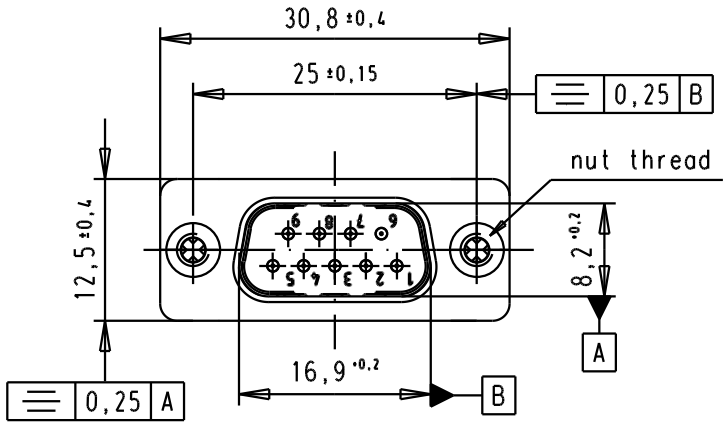

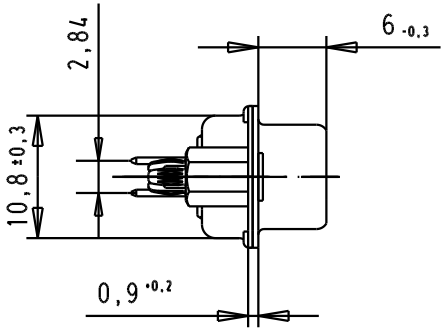

SPECIFICATION

Mating Cycles	500
Filter type	C
Capacitance	470pf ±20%
Working Voltage	100v
Current Rating	7.5A
Insulation Resistance	>1GΩ

FREQUENCY (MHz)	ATTENUATION (dB)
5	-
10	1dB
50	10dB
100	15dB
500	35dB
1000	32dB

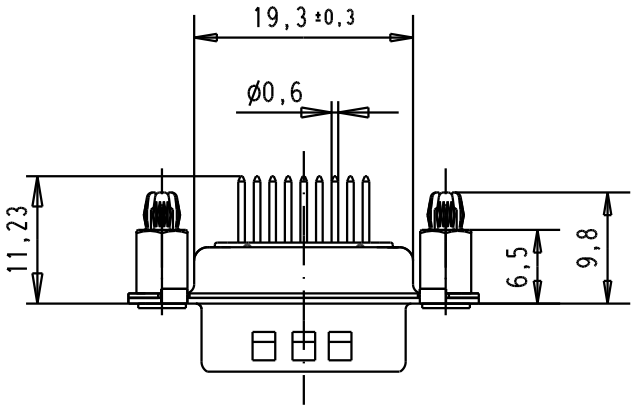

PCB Layout, Component side
PCB thickness 1,6 mm

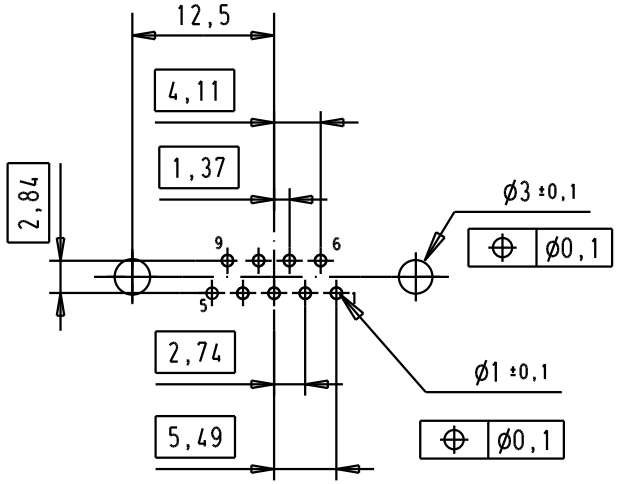

							Dat.	Name	All Dim. in mm Orig. Size DIN A 4	D-Sub, male, straight, 9 Poles, solder pins, tin plated shell with dimples, spacer nuts and board-locks	Ma?Mstab/ Scale
						Detail.	8-JUL-02	CV			1.5:1
						Insp.					
						Stand.					
09641227226	M3		33241	14/10/05	JMDR	HARTING EURL F-95972 Paris				TB 0964122722x	Blatt/ Page 2/3
09641227225	UNC 4-40		31058	8-JUL-02	CV						
Part number	Nut thread		Mod.	Dat.	Name					Sub.	