THIS COPY IS PROVIDED ON A RESTRICTED BASIS AND IS NOT TO BE USED IN ANY WAY DETRIMENTAL TO THE INTERESTS OF PANDUIT CORP.

PANDUIT PART NO	PACKAGE QTY	MTRT MAX BUNDLE DIAMETER	PTRT MAX BUNDLE DIAMETER	"L" LENGTH ±.3" [7]
MRT1.5DS-C4	100	1.5" [38]	1.9" [48]	15.4" [391]
MRT2.5DS-C4	100	2.5" [63]	2.9" [73]	21.7" [551]

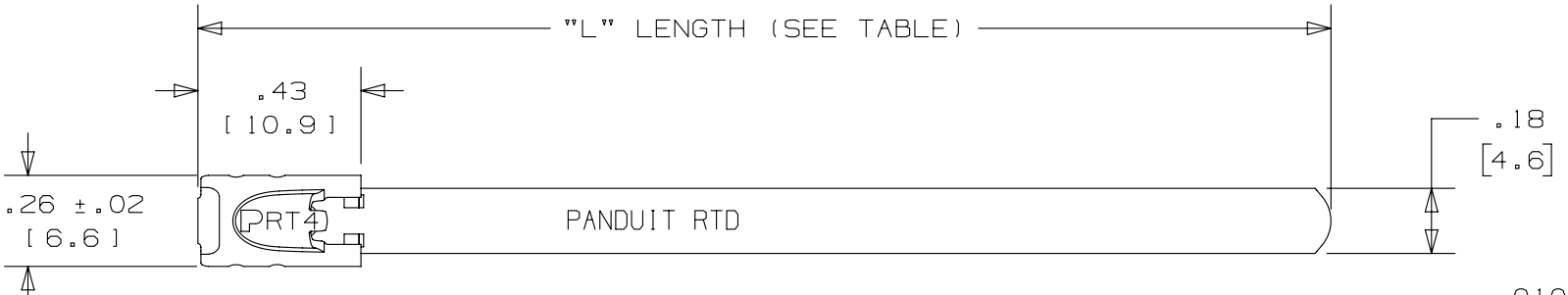

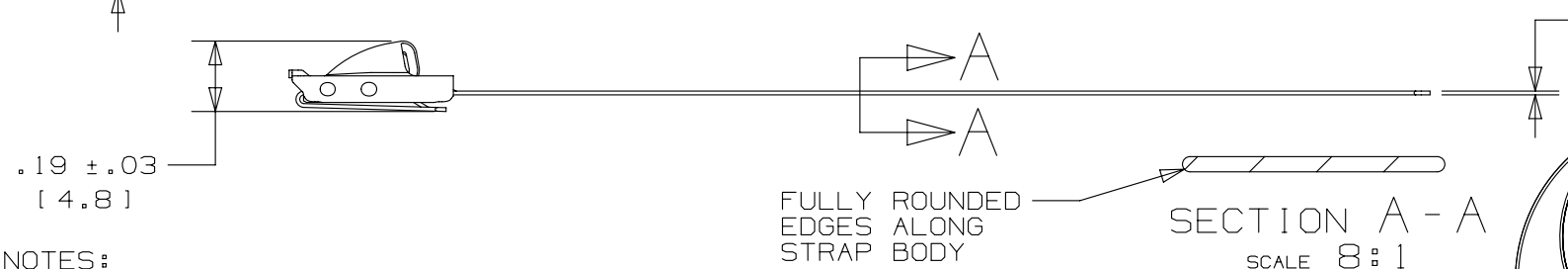

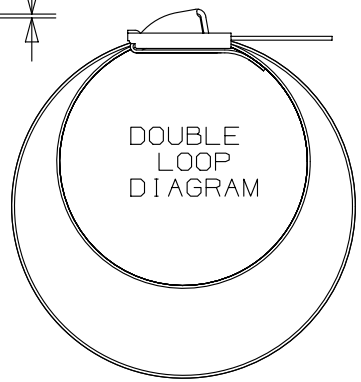

BODY WRAPS AROUND TWO TIMES
ENTERING HEAD TWICE
(NOT TO SCALE)

NOTES:
1. APPLICATION TOOLS: PTRT, MTRTLS OR MTRTH (WITH KMTRTLS KIT)
2. MINIMUM LOOP TENSILE STRENGTH:
   250 lbs [1112 NEWTONS] WHEN TESTED ON A 1.5" MANDREL
3. BRACKETS [ ] DENOTE DIMENSIONS IN MILLIMETERS, AND
   ARE SHOWN FOR REFERENCE ONLY
4. TOLERANCES:
   .XXX = ±.010 [.25] .XX = ±.02 [.5]
   .X = ±.03 [.8] ANGLES = ±2°
5. MATERIAL: 304 STAINLESS STEEL

REV	DATE	BY	CHK	APR	DESCRIPTION	ECN
09A	4/13	JAMB	MIM	RGRO	UPDATE DRAWING TO NEW GLOBAL PANDUIT TITLE BLOCK WITH PANDUIT LOGO	SSECN01056
08A	3/12	MIM	RGRO	---	NOTE #3 METRIC DIMENSIONS NOTED AS BEING SHOWN FOR REFERENCE ONLY	-------

TITLE
METAL TIE - STANDARD SERIES
DOUBLE LOOP - RETAINED TENSION
CUSTOMER DRAWING

ITEM REVISION NAME: N41247BS/09
DATASET FILE NAME: N41247BS_DC/09A

PANDUIT

UNLESS OTHERWISE SPECIFIED, DIMENSIONAL TOLERANCES ARE: IN [mm]
.X ± .1 [2.54] .XXX ± .005 [.127]
.XX ± .01 [.25] ANGLES ± 5 °
THIRD ANGLE PROJECTION

MATERIAL: 304 STAINLESS STEEL

DRAWING NUMBER: N41247BS_DC

DRAWN BY	DATE	CHK	SCALE	SHT 1 OF 1	SIZE
JAMB		EJD	2:1		A