Alle Rechte vorbehalten/ *All rights reserved*

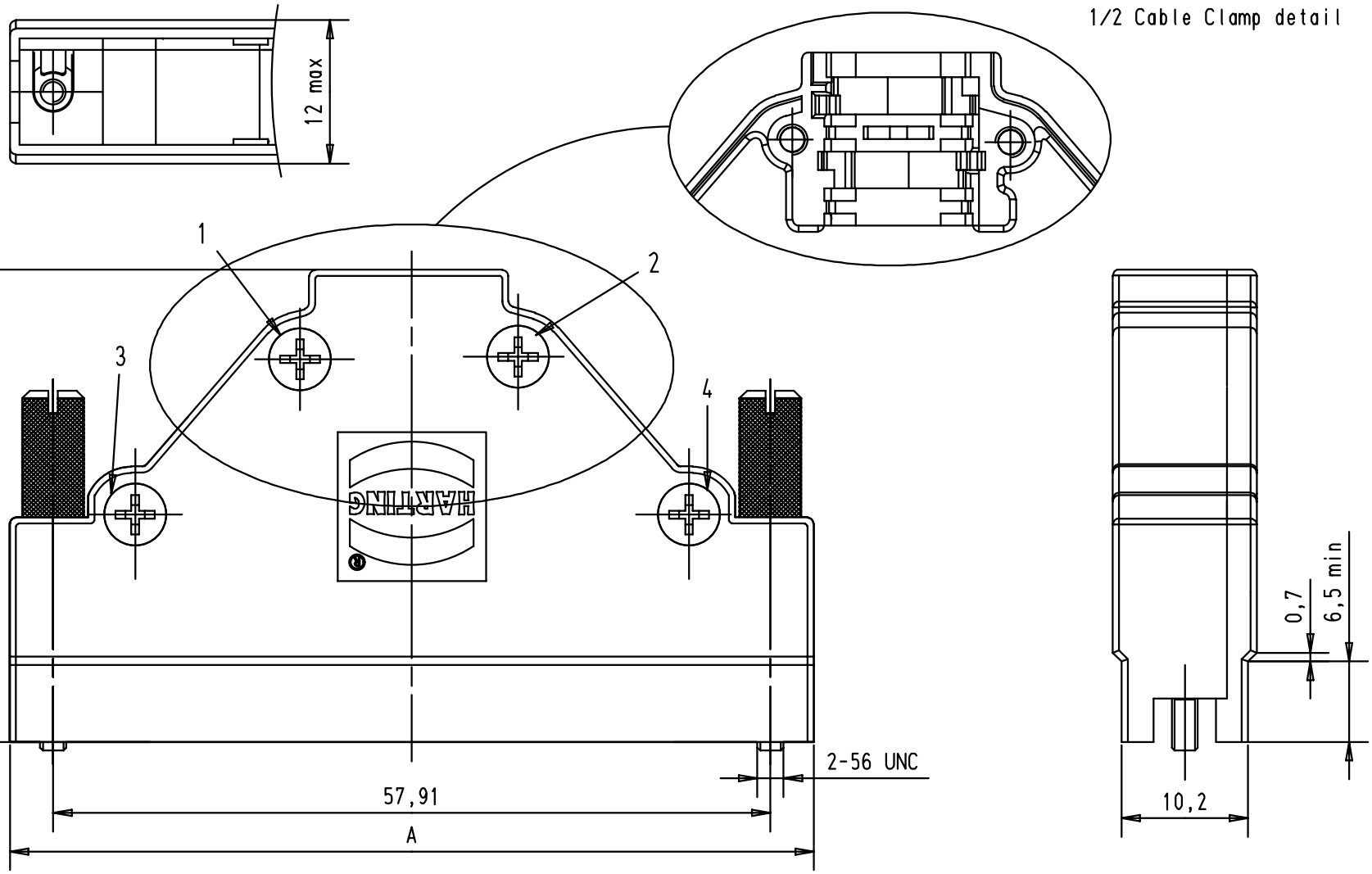

68	65.12	38.2	8.7	10.7	60 03 068 0145	27956	09.11.00	PP
Number of contacts	A (max)	B (max)	⌀mini	⌀maxi	Part Number	23295	02.06.99	PP
			Valid for cable			Mod.	Dat.	Name

	Dat.	Name
Detail.	02.06.99	PP
Insp.		
Stand.		

All Dim. in mm
Orig. Size DIN A 4

HARTING E.U.R.L
F-95972 Paris

har-mik ®
68 poles Hood
straight cable entry
with two UNC 2-56 jack screws

TB 60030680145

Sub.

Maßstab/ *Scale* 2:1

Blatt/ *Page* 1/1