SERPAC Electronic Enclosures

CA-10,0 (no buttons option)

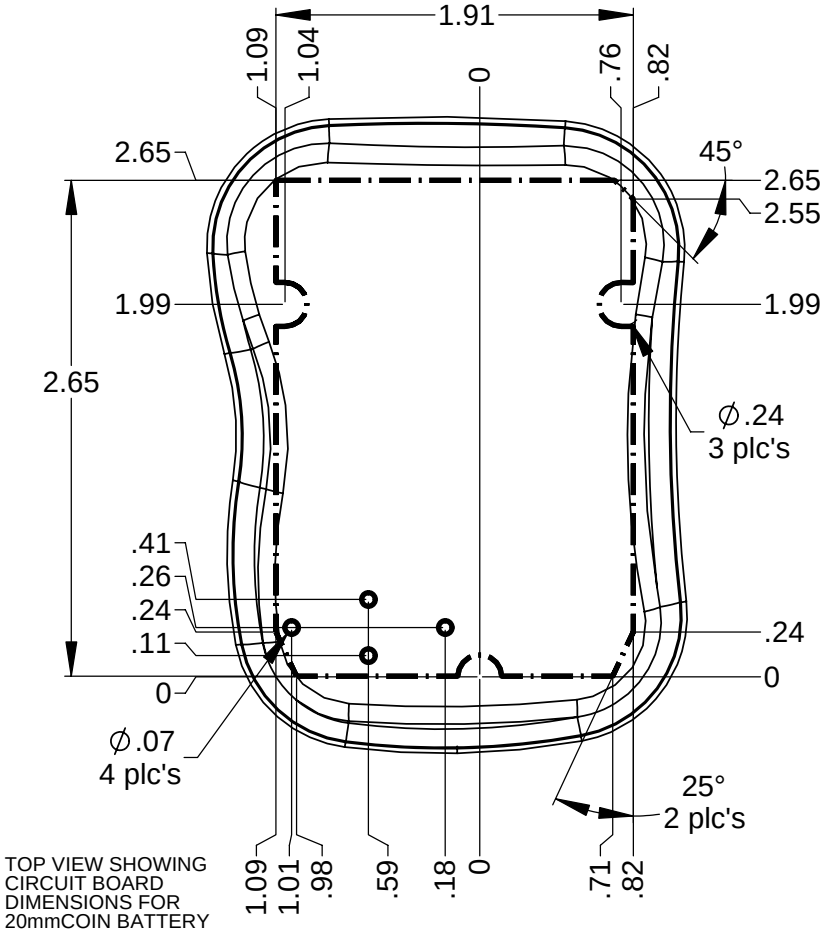

TOP VIEW SHOWING CIRCUIT BOARD DIMENSIONS FOR 20mmCOIN BATTERY

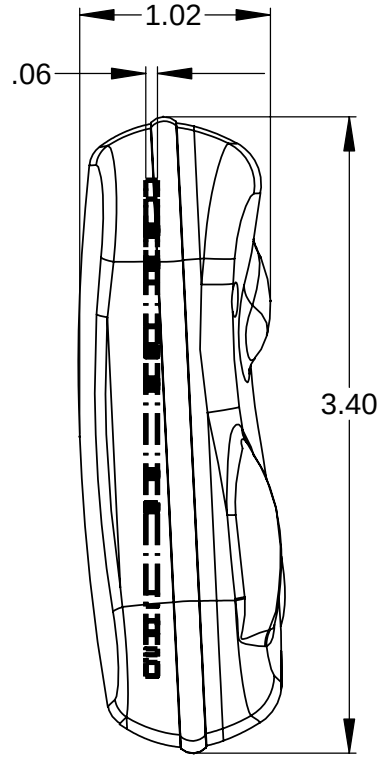

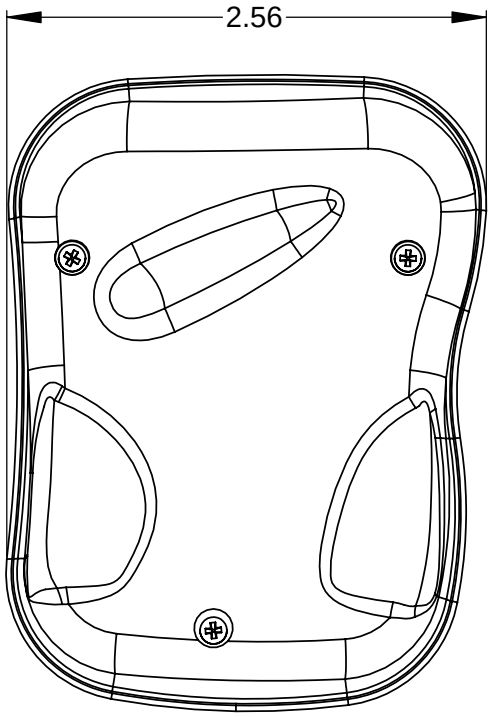

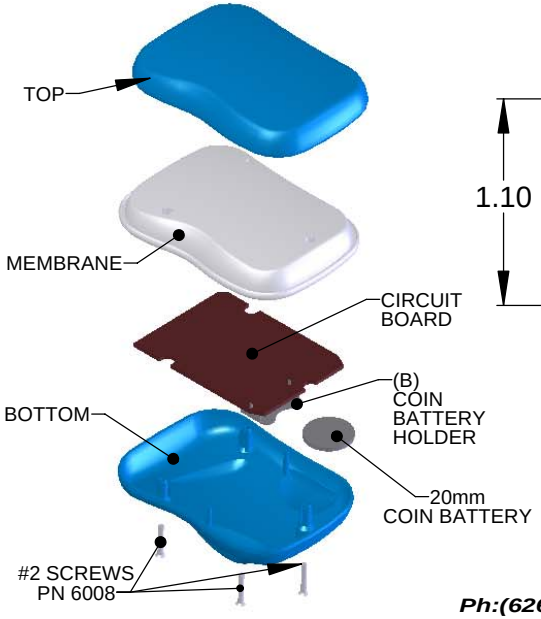

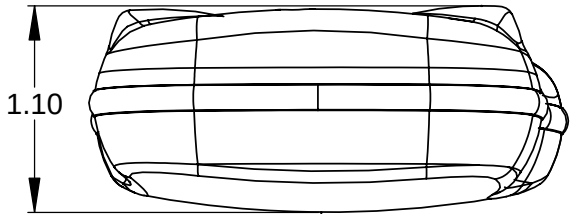

NOTES:

1) Serpac Provides the following components:
Top, Bottom, Membrane and (3) #2 Screws.
All components are shipped unassembled.

2)

The following components fit this enclosure.			
	Manufacturer	**PN option I**	**PN option II**
	Other switches manufacturers and types will fit the unit.		
B	**KEYSTONE**	3003 positive	
B	**KEYSTONE**	2990 negative	

ALL DIMENSIONS ARE ± .010" *2/23/05*

619 Commercial Ave. Covina, CA 91723
Ph:(626) 331-0517 Fx: (626) 331-8584 www.serpac.com