THIS DRAWING IS UNPUBLISHED. RELEASED FOR PUBLICATION FEB ,2006.
© COPYRIGHT 2006 By – ALL RIGHTS RESERVED.

LOC	DIST
E	B

REVISIONS

P	LTR	DESCRIPTION	DATE	DWN	APVD
	C	ECR–06–002568	02FEB06	JMS	FWK
	D	ECO–12–011078	12JUN12	TITAN	MARTIN

NOTES:

1. PACK IN ACCORDANCE WITH AMP SPEC 107–3275
2. 100 TRAY PACK IN ACCORDANCE WITH AMP SPEC 107–3275
3. Au PLATING
4. Ni PLATING

5 ELECTRICAL CHARACTERISTICS

FREQUENCY RANGE:	DC – 2 GHz
NOMINAL IMPEDANCE:	50 Ohm
INSULATION RESISTANCE:	5000 MOhm
WORKING VOLTAGE:	335 Volts RMS at Sea Level
DIELECTRIC WITHSTAND VOLTAGE:	1000 Volts RMS Max
CONTACT RESISTANCE:	
CENTRE CONTACT:	10.00 mOhm Max
OUTER CONTACT:	5.00 mOhm Max
VSWR @ 1GHz:	1.5 Max
INSERTION LOSS :	0.50 dB Max

6 MECHANICAL CHARACTERISTICS

COUPLING NUT RETENTION FORCE:	60 lbs MIN.
DURABILITY:	500 Cycles Min
RECOMMENDED COUPLING TORQUE:	18 in–lbs MAX.

7 ENVIRONMENTAL CHARACTERISTICS

OPERATING TEMPERATURE:	–55 to +125 DegC

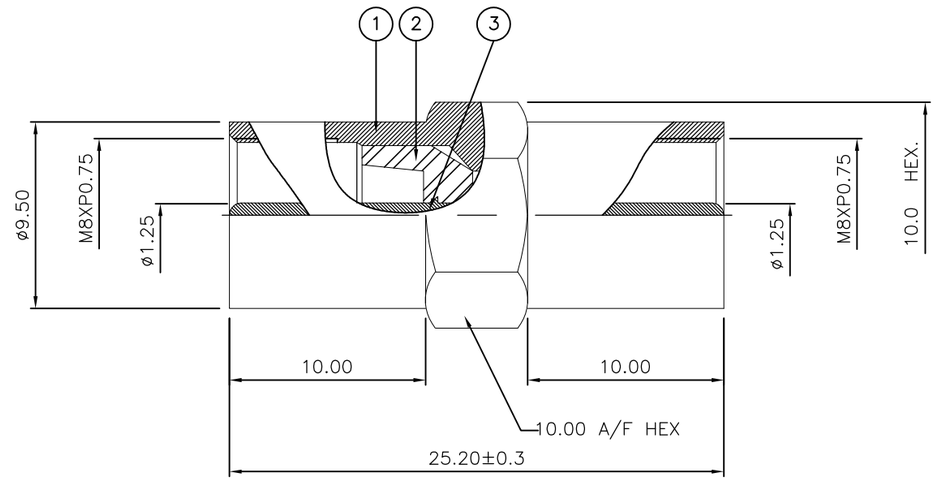

		1	1	BRASS (3)	CONTACT	3
		2	2	PTFE	INSULATION	2
		1	1	BRASS (4)	BODY	1
		6--0	1--0	MATERIAL	DESCRIPTION	ITEM
		(2)	(1)			
QUANTITY PER ASSY				PARTS LIST		

THIS DRAWING IS A CONTROLLED DOCUMENT.

DIMENSIONS: mm

TOLERANCES UNLESS OTHERWISE SPECIFIED:

0 PLC	± –
1 PLC	± 0.2
2 PLC	± 0.1
3 PLC	± 0.05
4 PLC	± –
ANGLES	± 5°

MATERIAL: SEE TABLE

FINISH: –

DWN	J.SANDWELL	02FEB06
CHK	S.PARLOW	02FEB06
APVD	F.WHEELER–KING	02FEB06
PRODUCT SPEC	—	
APPLICATION SPEC	—	
WEIGHT	—	

CUSTOMER DRAWING

TE Connectivity

NAME: FME STRAIGHT ADAPTOR P–P 50 OHM
–
–

SIZE	CAGE CODE	DRAWING NO	RESTRICTED TO
A3	00779	C–1337553	—

SCALE	SHEET	REV
NTS	1 OF 1	D