DRAWING MADE IN THIRD ANGLE PROJECTION
THIS DRAWING IS UNPUBLISHED. RELEASED FOR PUBLICATION ,19 .
© COPYRIGHT 19 BY AMP INCORPORATED,HARRISBURG,PA. ALL INTERNATIONAL RIGHTS RESERVED. AMP PRODUCTS MAY BE COVERED BY U.S. AND FOREIGN PATENTS AND/OR PATENTS PENDING.

MOD	LOC	DIST
25	AD	39

REVISIONS

P	F	ZONE	LTR	DESCRIPTION	DATE	APPD
			B	REV/REDRAW PER ECN AR2699	10-11-89	–
						–
			C	REV LOC & DIST AD-4171	3-90	BF
			D	ECN AD-4707	08/02/90	KIH
			E	REV PER AD-5084	1-31-91	–
			F	REV PER AD-5161	1-31-91	–
			G	REV PER 0310-0040-96	12-16-96	SAS
			H	REV PER 0010-0713-96	1-17-97	SAS

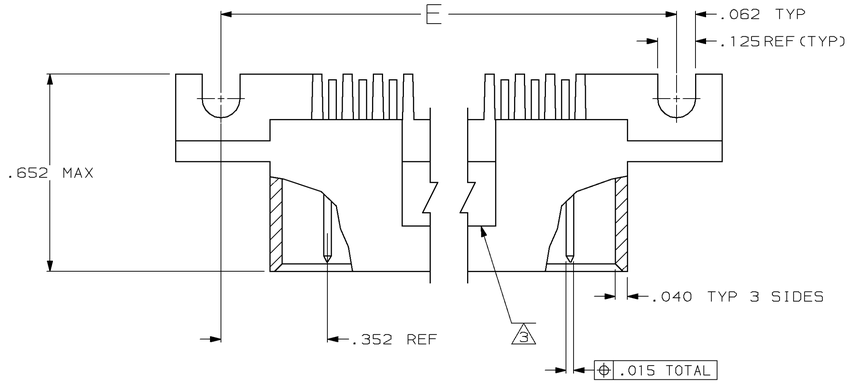

1 STANDOFFS: 10 THRU 18 POSN (2) REQ'D LOCATED AS SHOWN-OUTBOARD OF END CIRCUITS
20 THRU 38 POSN (3) REQ'D LOCATED OUTBOARD OF END CIRCUITS PLUS ONE CENTERED
40 THRU 60 POSN (4) REQ'D LOCATED OUTBOARD OF END CIRCUITS WITH TWO EVENLY SPACED SPACED WITHIN REMAINING LENGTH

2 WILL ALSO MATE WITH OTHER CONNECTORS WICH ARE COMPATIBLE WITH THE .150 END DIM AND WILL MATE WITH MOD IV HAVING FOUR EXTRA EMPTY CIRCUITS (TWO EACH END --- EX. 20 POSN HDR WILL MATE W/24 POSN MOD IV HSG)

3 ACCESS SLOT

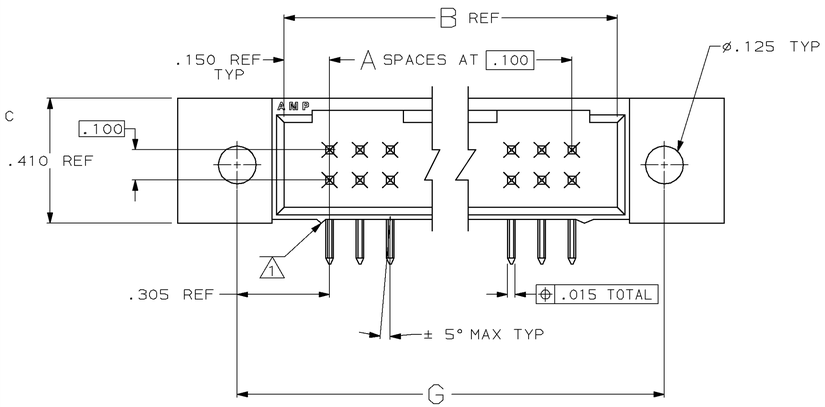

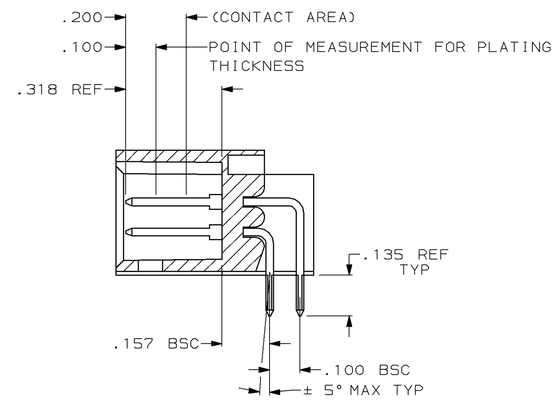

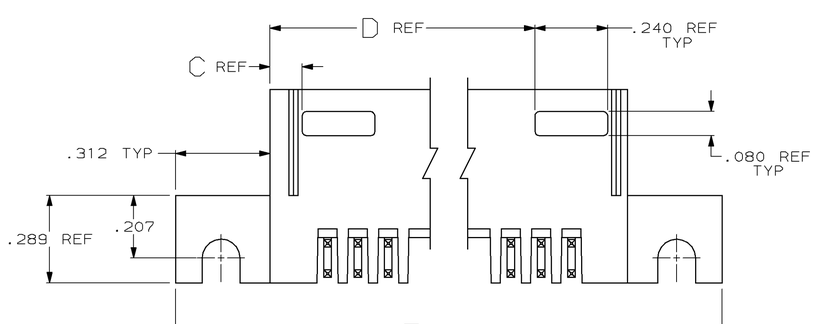

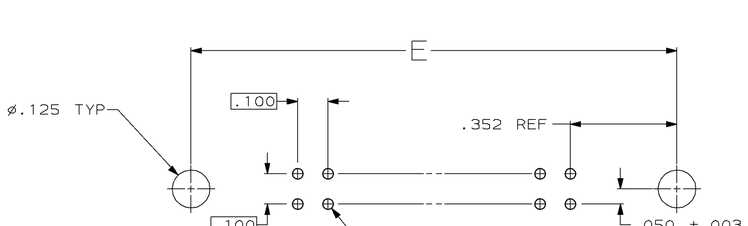

RECOMMENDED HOLE LAYOUT

	G	F	E	D	C	B	A	NO OF POSN	ASSEMBLY PART NUMBER
OBSOLETE	3.510	3.904	3.604	2.890	.190	3.200	29	60	2-87672-6
OBSOLETE	3.410	3.804	3.504	2.790	.190	3.100	28	58	2-87672-5
OBSOLETE	3.310	3.704	3.404	2.690	.190	3.000	27	56	2-87672-4
OBSOLETE	3.210	3.604	3.304	2.590	.190	2.900	26	54	2-87672-3
OBSOLETE	3.110	3.504	3.204	2.490	.190	2.800	25	52	2-87672-2
OBSOLETE	3.010	3.404	3.104	2.390	.190	2.700	24	50	2-87672-1
OBSOLETE	2.910	3.304	3.004	2.290	.190	2.600	23	48	2-87672-0
OBSOLETE	2.810	3.204	2.904	2.190	.190	2.500	22	46	1-87672-9
OBSOLETE	2.710	3.104	2.804	2.090	.190	2.400	21	44	1-87672-8
OBSOLETE	2.610	3.004	2.704	1.990	.190	2.300	20	42	1-87672-7
OBSOLETE	2.510	2.904	2.604	1.890	.190	2.200	19	40	1-87672-6
OBSOLETE	2.410	2.804	2.504	1.790	.190	2.100	18	38	1-87672-5
OBSOLETE	2.310	2.704	2.404	1.690	.190	2.000	17	36	1-87672-4
OBSOLETE	2.210	2.604	2.304	1.590	.190	1.900	16	34	1-87672-3
OBSOLETE	2.110	2.504	2.204	1.490	.190	1.800	15	32	1-87672-2
OBSOLETE	2.010	2.404	2.104	1.390	.190	1.700	14	30	1-87672-1
OBSOLETE	1.910	2.304	2.004	1.290	.190	1.600	13	28	1-87672-0
OBSOLETE	1.810	2.204	1.904	1.190	.190	1.500	12	26	87672-9
	1.710	2.104	1.804	1.090	.190	1.400	11	24	87672-8
OBSOLETE	1.610	2.004	1.704	.990	.190	1.300	10	22	87672-7
OBSOLETE	1.510	1.904	1.604	.890	.190	1.200	9	20	87672-6
OBSOLETE	1.410	1.804	1.504		.490	1.100	8	18	87672-5
OBSOLETE	1.310	1.704	1.404		.390	1.000	7	16	87672-4
OBSOLETE	1.210	1.604	1.304		.390	.900	6	14	87672-3
OBSOLETE	1.110	1.504	1.204		.290	.800	5	12	87372-2
OBSOLETE	1.010	1.404	1.104		.290	.700	4	10	87672-1

UNLESS OTHERWISE SPECIFIED DIMENSIONS ARE IN INCHES
TOLERANCES ON :
2 PL DEC ±-
3 PL DEC ±.005
ANGLES ±-

MATERIAL: HOUSING: FLAME RETARDANT THERMOPLASTIC, COLOR-BLACK
POSTS: PHOS BRONZE
FINISH: POSTS: .000030 GOLD IN CONTACT AREA, GOLD FLASH ON SOLDER AREA, ALL OVER .000050 MIN NICKEL ON ENTIRE POST.

DR 10/11/89 KATE HELM
CHK 10-25-89 R. ELICKER
APPD 10-25-89 R. ELICKER
APPD 10-25-89 FLINCHBAUGH
PRODUCT SPEC –
APPLICATION SPEC –
WEIGHT –

AMP | AMP INCORPORATED Harrisburg, Pa. 17105

NAME HEADER ASSY, MOD II, DBL ROW, RIGHT ANGLE, .100X.100¢ WITH .025 SQ POSTS 2

SIZE D | FSCM NO 00779 | DRAWING NO 87672
SCALE 4:1 | SHEET 1 OF 1

CUSTOMER DRAWING

AMP 1756-3 REV 10-84