Copyright FCI.

FCIconnect.com

PRODUCT NUMBER	PITCH
VFxx72x100J0G	5.00 mm

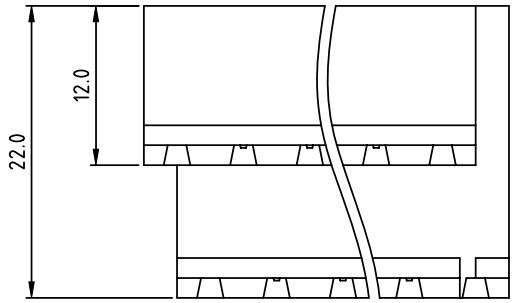

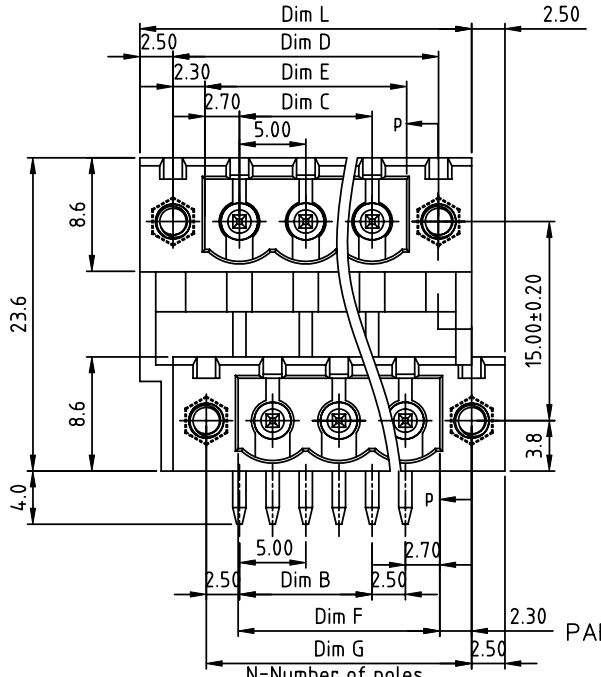

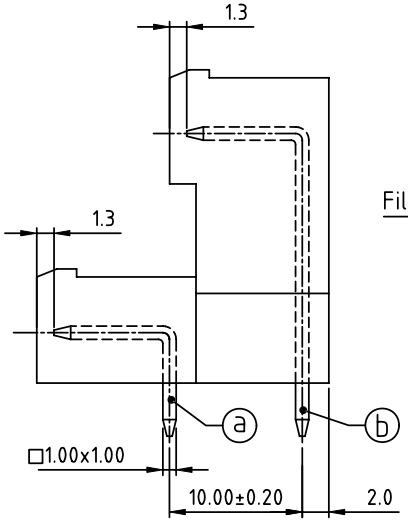

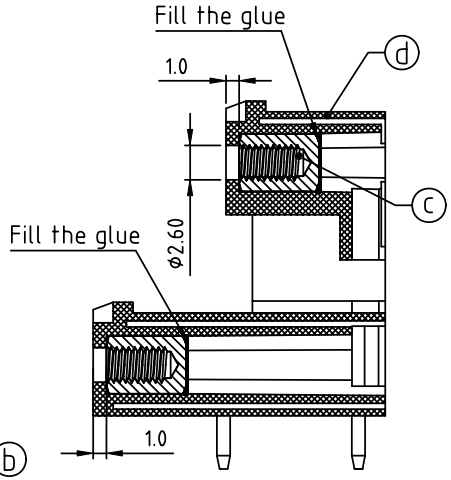

SECTION P-P

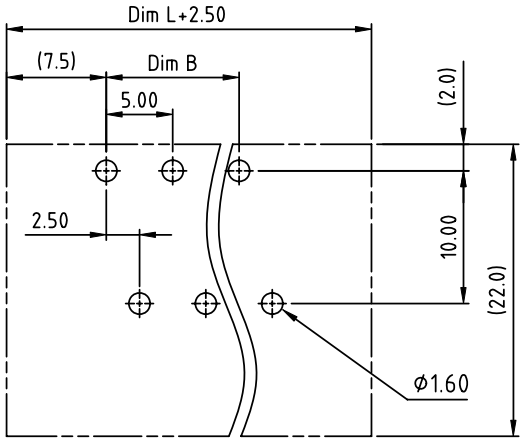

RECOMMENDED P.C.B LAYOUT
TOP VIEW

Material:

- Item ⓐ Short pin: Copper,Tin plated
- Item ⓑ Long pin: Copper,Tin plated
- Item ⓒ With flange nut: brass M2.5
- Item ⓓ Terminal (housing): Thermoplastic (UL94V-0)

Electrical cULus

- Voltage rating: 300VAC
- Current rating: 10A
- Withstanding Voltage: 1.6KV
- Operating temperature: -40°C to +115°C
- Soldering temperature: 260°C±5°C/5 Sec
- Safety Approval: c UL us

PART NO.: VF xx 72 x 1 00J0 G

Solid block
No. of poles
04 2x2poles
06 2x3poles
... ...
48 2x24poles

Color
0 Black (RAL9005)
2 Red (RAL3001/D)
3 Orange(RAL2011/P)
4 Yellow(RAL1018/A)
5 Green(RAL6018/T)
6 Blue (RAL5015/A)
8 Grey(RAL7035/D)
9 White(RAL1102)
C Green(RAL6018/U)

RoHS compliant
(lead<4%)
In copper Alloy

Dimension	
Dim L	(N/2+2)×5.0
Dim B	(N/2-1)×5.0
Dim C	(N/2-1)×5.0
Dim D	(N/2-1)×5.0+10.0
Dim E	(N/2-1)×5.0+5.4
Dim F	(N/2-1)×5.0+5.4
Dim G	(N/2-1)×5.0+10.0

N=Number of poles

Poles	Tolerance
2×2P-2×5P	±0.15
2×6P-2×10P	±0.20
2×11P-2×15P	±0.25
2×16P-2×20P	±0.30
2×21P-2×24P	±0.40

mat'l. code				surface ASME Y14.5	tolerance ASME Y14.5	projection	product family TERMINAL BLOCK
ltr	ecn no	dr	date	tolerances unless otherwise specified			title TERMINAL BLOCK PLUGGABLE SOCKET,WITH FLANGE,RIGHT ANGLE
				angles	linear X.±0.5 / X.X±0.3 / X.XX±0.1	MM	
				X°±1°		scale	
				dr	EVIN ZHONG 042914		dwg no VFxx72x100J0G sheet 1 of 1 size A4
				engr	EVIN ZHONG 042914		
				chr	HANKE FENG 042914		
				appd	SHI JUN 042914		type CUSTOMER Drawing
sheet index	revision A	sheet 1					