MICRO SWITCH
a Honeywell Division
FED.MFG.CODE 91929

SWITCH–BASIC

CATALOG LISTING
V3–507
CK–E8250

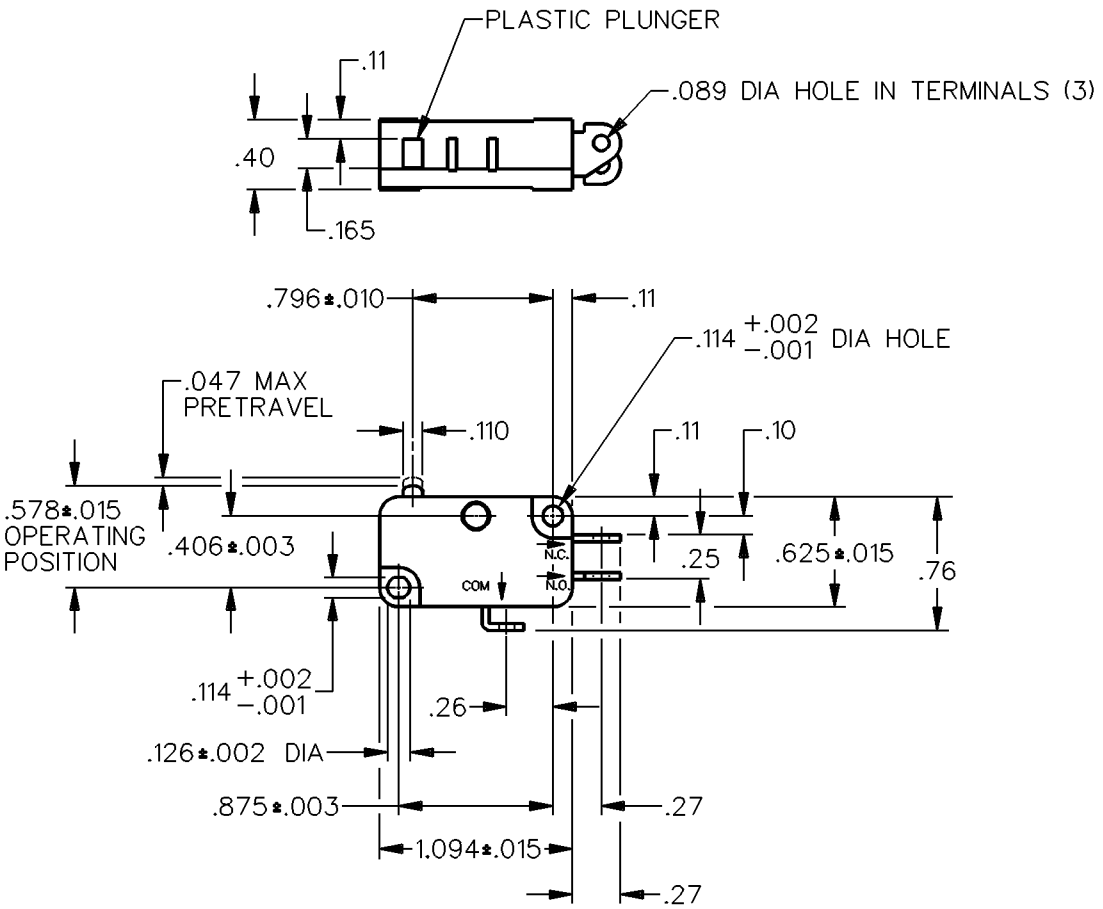

NOTE
1 – TERMINALS ARE PLATED FOR SOLDERING

THIS DRAWING COVERS A PROPRIETARY ITEM AND IS THE PROPERTY OF MICRO SWITCH, A DIVISION OF HONEYWELL. THIS DRAWING IS NOT TO BE COPIED OR USED WITHOUT THE APPROVAL OF MICRO SWITCH.

THIRD ANGLE PROJECTION

CHARACTERISTICS	ELECTRICAL DATA	SCALE FULL — DO NOT SCALE PRINT
OPERATING FORCE — — — — 8 OZ MAX	CONTACT ARRANGEMENT S P D T	UNLESS OTHERWISE SPECIFIED TOLERANCES ARE
RELEASE FORCE — — — — — 2 OZ MIN	L156 11A 1/3HP 125, 250 OR 277 VAC 1/2A 125 VDC, 1/4A 250 VDC 4A 125 VAC "L"	ONE PLACE (.0) ±.030
DIFFERENTIAL TRAVEL — — — .006–.016		TWO PLACE (.00) ±.015
OVERTRAVEL — — — — — — .040 MIN		THREE PLACE (.000) ±.005
FREE POSITION — — — — — .625 MAX		ANGLES ±
RELEASE TRAVEL — — — — — .010 MIN		WEIGHT .016 LB

CATALOG LISTING V3–507
ISSUE 2
REPLACES
RELEASE NO. PR–19058
CHECK
REVISIONS
A CO 76441 DCS 22 DEC 93
CHECK
8 MAR 91 WJC
CHECK
7 MAR 91 B A B
DRAWN
DDM/CAD