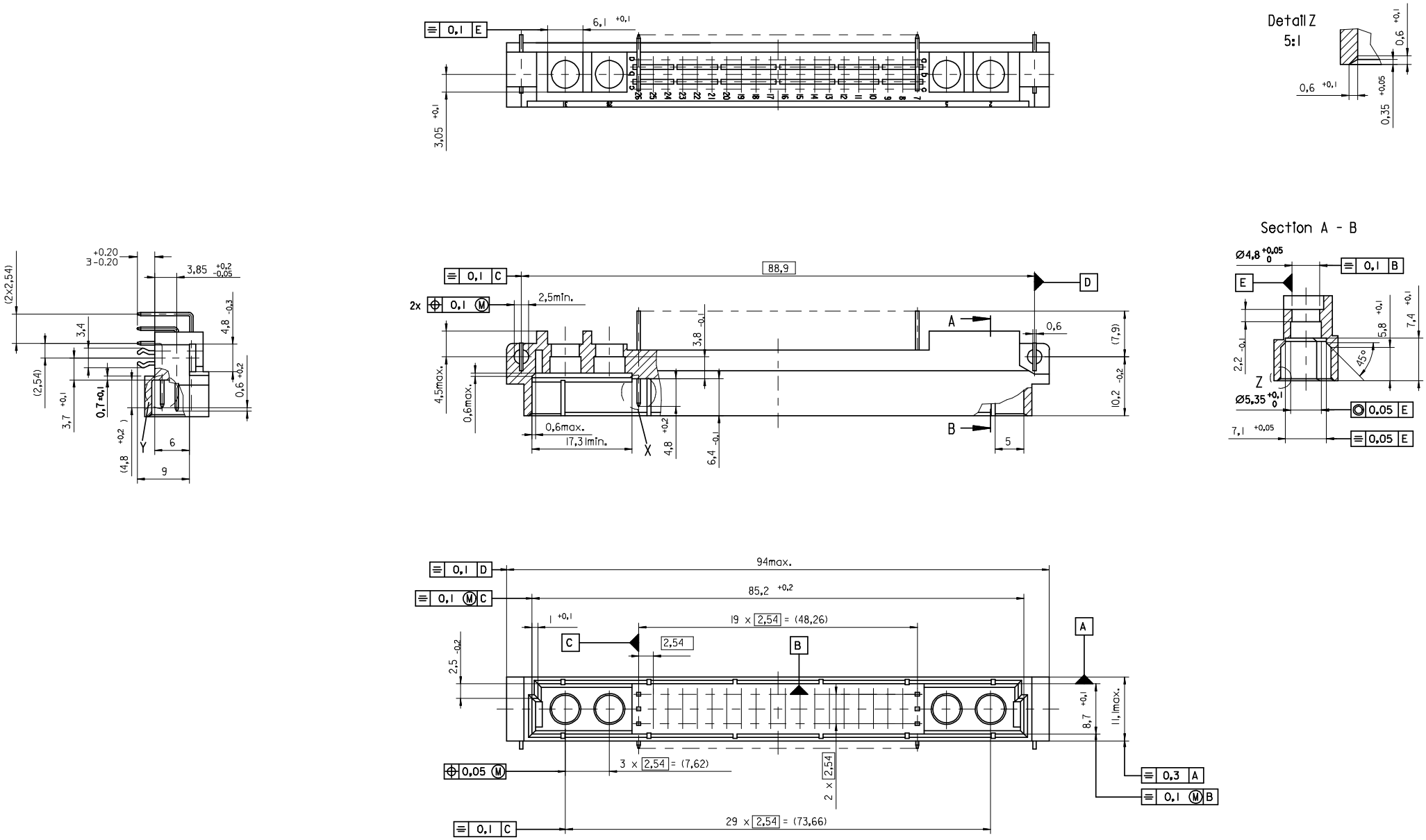

ENTER DESCRIPTION	EC NO: I2009-0039	DRWN:SJ 2008/07/28	CH'KD:KPRASAD 2008/07/31
APPR:KPRASAD 2008/08/11	DESCRIPTION	REV	B

QUALITY SYMBOLS: ▼=0 ▽=0

GENERAL TOLERANCES (UNLESS SPECIFIED)

	mm	INCH
4 PLACES	± ---	± ---
3 PLACES	± ---	± ---
2 PLACES	± ---	± ---
1 PLACE	± ---	± ---
ANGULAR ± 2 °		

DRAFT WHERE APPLICABLE MUST REMAIN WITHIN DIMENSIONS

DIMENSION STYLE: MM ONLY	SCALE: 2:1	DESIGN UNITS: METRIC	THIRD ANGLE PROJECTION
DRAWN BY: CA	DATE: 1995/06/13	TITLE: 60POS. MALE DIN CONNECTOR DIN 41612 STYLE M	
CHECKED BY: KN	DATE: 1995/06/13		
APPROVED BY: KN	DATE: 1995/06/13	MOLEX INCORPORATED	
MATERIAL NO.: --------		DOCUMENT NO.: SDA-85009-0003	SHEET NO.: 1 OF 2
SIZE: A2	THIS DRAWING CONTAINS INFORMATION THAT IS PROPRIETARY TO MOLEX INCORPORATED AND SHOULD NOT BE USED WITHOUT WRITTEN PERMISSION		

View on mating side

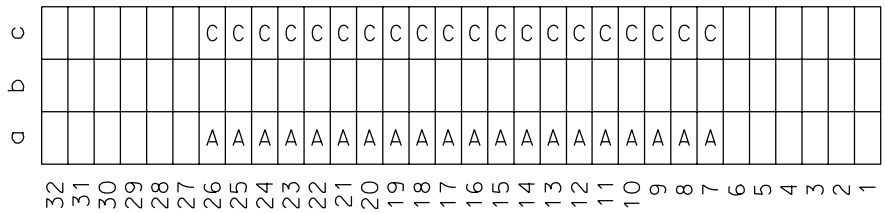

A = 20 standard contacts L=3
C = 20 standard contacts L=3

S = 40 total number of contacts

Marking	Standard
Performance level	G2/0 = Contact area level2 / Termination tin
Flux proof	no
Fixing clip	no
Dimensions	SDA-85009-0003 sht.1
Technical Data	PS-85003-0001

Contact symbol	Perform. level	Contact position number
C	G2/0	c7-26
A	G2/0	a7-26

see ECN No. 2204
96/07/18 Ca

LTR	REVISIONS
C	

FOR PREVIOUS REVISIONS SEE MRI LIST

UNLESS OTHERWISE SPECIFIED TOLERANCES: ANGULAR ±2°

	INCH	METRIC
3 PLACE	± .	±
2 PLACE	± .	±
1 PLACE	± .	±

DRAFT WHERE APPLICABLE MUST REMAIN WITHIN DIMENSIONS

DESIGN DIMENSION ☐ MM ☐ IN.

EQUIVALENT DIMENSION ☐ MM ☐ IN.

IF TWO DIMENSIONS ARE SHOWN THE UPPER IS THE DESIGN DIMENSION, LOWER IS SECONDARY

DRWG BY	Ca	SIGN
CHK'D BY	KN	SIGN
APP'D BY		SIGN
SCALE		

REVISE ONLY ON CAD SYSTEM | SH. | REV.

CADCAM PROJECT NAME s8500900 s61

THIS DRAWING CONTAINS INFORMATION THAT IS PROPRIETARY TO MOLEX INC. & SHOULD NOT BE USED WITHOUT WRITTEN PERMISSION

TITLE
60 pos. Male connector acc. DIN 41612 style M contacts arrangement

molex® MOLEX EUROPE

SHEET NO. 1 OF 1 | DATE 95/06/08

PART NO. 85009-0062 | DWG NO. SDA-85009-0062 | SIZE A