THIS DRAWING IS UNPUBLISHED. RELEASED FOR PUBLICATION - ,- .
© COPYRIGHT - BY TYCO ELECTRONICS CORPORATION. ALL RIGHTS RESERVED.

LOC	DIST
AA	00

REVISIONS

P	LTR	DESCRIPTION	DATE	DWN	APVD
	D	ECO-07-026535	31MAR2008	LAM	AWF

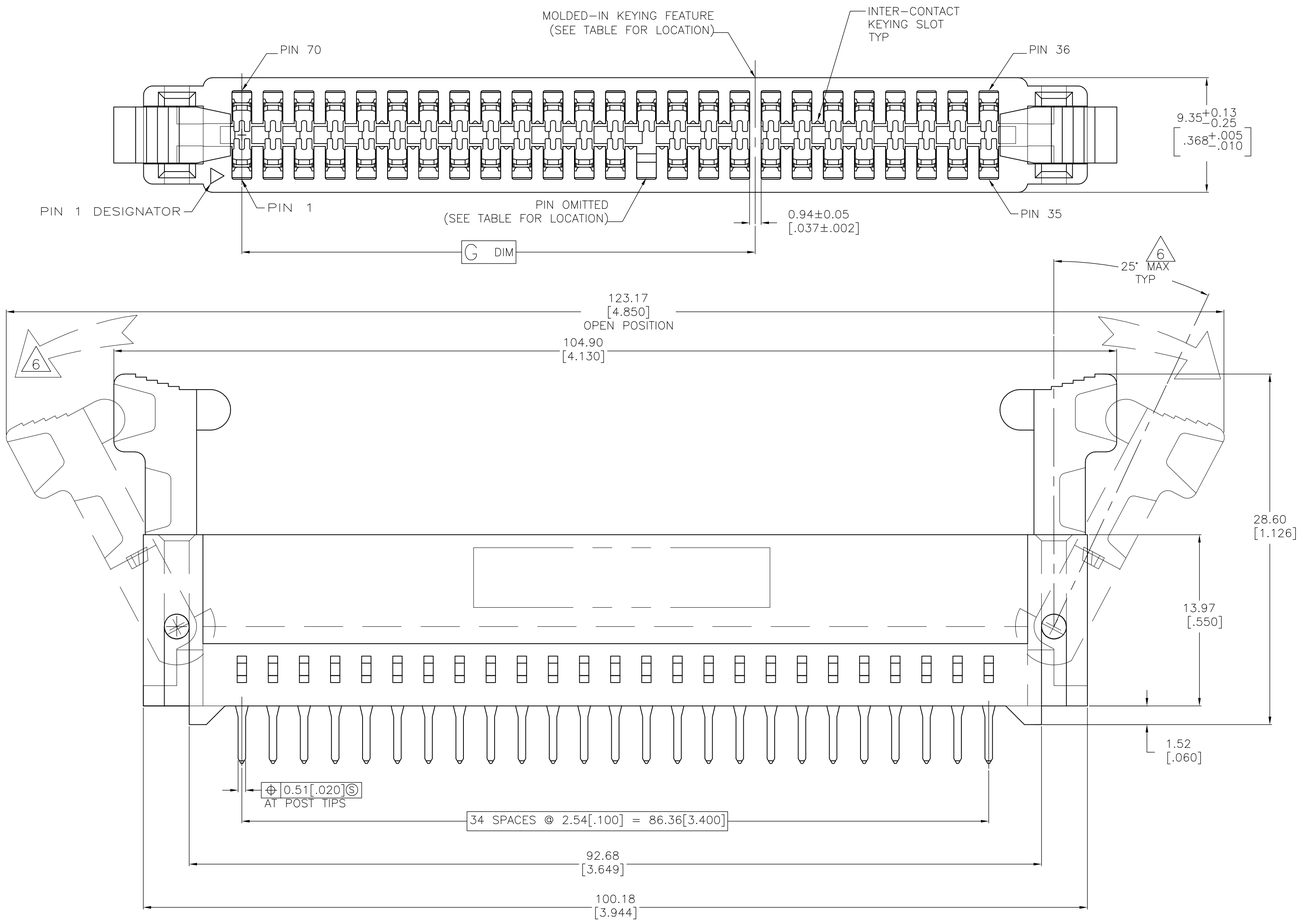

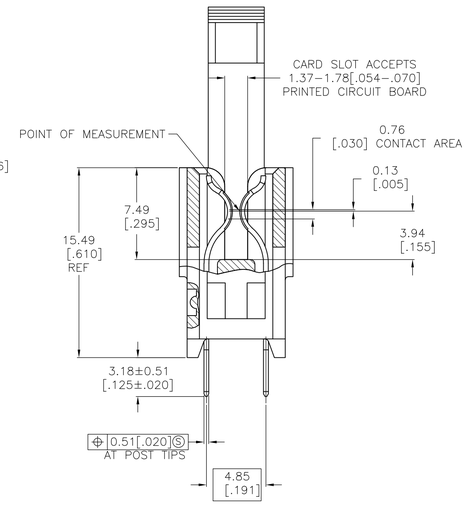

1. MATERIAL:
   HOUSING: GLASS FILLED POLYESTER, COLOR: BLACK.
   CONTACT: PHOS BRONZE
   LATCH: GLASS FILLED POLYESTER, COLOR: BLACK
2. FINISH:
   0.00076[.000030] MIN GOLD PLATE IN CONTACT AREA,
   0.00254[.000100] MIN MATTE TIN ON SOLDER POSTS, ALL
   OVER 0.00127[.000050] MIN NICKEL

3. AMP LOGO, TE PART NUMBER, DATE CODE AND CSA LOGO INK STAMPED WHITE (HOT STAMPED OR LAZER PRINTED) IN THE APPROXIMATE AREA SHOWN, EITHER SIDE PERMISSABLE, WHEN HOUSING SIZE PERMITS

4. DATUMS AND BASIC DIMENSIONS ESTABLISHED BY CUSTOMER

5. CONNECTORS SHOWN ARE USED IN APPLICATIONS WITH VRM MODULES WEIGHING 3 OUNCES OR LESS. ALTERNATE CONNECTOR AND LATCH METHOD IS AVAILABLE FOR VRM MODULES WEIGHING UP TO 6 OUNCES.

6. CAUTION: LATCHES ARE INTENDED FOR RETENTION OF PC BOARD TO CONNECTOR, DO NOT ATTEMPT TO FULLY EJECT PC BOARD FROM CONNECTOR WHILE DISENGAGING LATCHES. DAMAGE TO LATCHES AND OR CONNECTOR MAY OCCUR

7. CONNECTORS WITHOUT MOLDED-IN KEYING FEATURE REQUIRE THE USE OF INTERCONTACT KEY PLUG 650025-2. KEY PLACEMENT WITHIN CONNECTOR AT DISCREATION OF END USER

8. KEY SLOT REQUIRED WITH USE OF INTERCONTACT KEY PLUG, LOCATION TO CORRESPOND

PART NUMBER
OBSOLETE 3-5145459-1
OBSOLETE 3-5145459-0
OBSOLETE 2-5145459-5
OBSOLETE 2-5145459-2
OBSOLETE 2-5145459-1
OBSOLETE 2-5145459-0
OBSOLETE 1-5145459-5
OBSOLETE 1-5145459-4
OBSOLETE 1-5145459-3
OBSOLETE 1-5145459-0
OBSOLETE 5145459-9
OBSOLETE 5145459-7
OBSOLETE 5145459-6
OBSOLETE 5145459-4

23 & 24	31.57 [1.243]	59.51 [2.343]	57.15 [2.250]	35	5145459-5
7 8	7 8	7 8	7 8	35	5145459-2
MOLDED-IN KEYING FEATURE LOCATED BETWEEN PINS	P	N	G	NO OF DUAL POSITIONS	PART NUMBER

THIS DRAWING IS A CONTROLLED DOCUMENT.

DIMENSIONS: mm [INCHES]

TOLERANCES UNLESS OTHERWISE SPECIFIED:
0 PLC ± –
1 PLC ± –
2 PLC ± 0.13 [.005]
3 PLC ± –
4 PLC ± –
ANGLES ± 2°

MATERIAL: SEE NOTE 1
FINISH: SEE NOTE 2

DWN MM/L.A.MAYER 31MAR2008
CHK A.W.FRANTUM 31MAR2008
APVD S.FLICKINGER 31MAR2008
PRODUCT SPEC 108-9039
APPLICATION SPEC 114-13018
WEIGHT –

Tyco Electronics
Tyco Electronics Corporation
Harrisburg, PA 17105-3608

NAME: CONNECTOR ASSEMBLY, STANDARD EDGE II, 2.54[.100] CENTERLINE

SIZE	CAGE CODE	DRAWING NO	RESTRICTED TO
A1	00779	C-5145459	–

CUSTOMER DRAWING | SCALE 4:1 | SHEET 1 OF 2 | REV D

THIS DRAWING IS UNPUBLISHED. RELEASED FOR PUBLICATION - , - .
© COPYRIGHT - BY TYCO ELECTRONICS CORPORATION. ALL RIGHTS RESERVED.

LOC	DIST
AA	00

REVISIONS

P	LTR	DESCRIPTION	DATE	DWN	APVD
	—	SEE SHEET 1	—	—	—

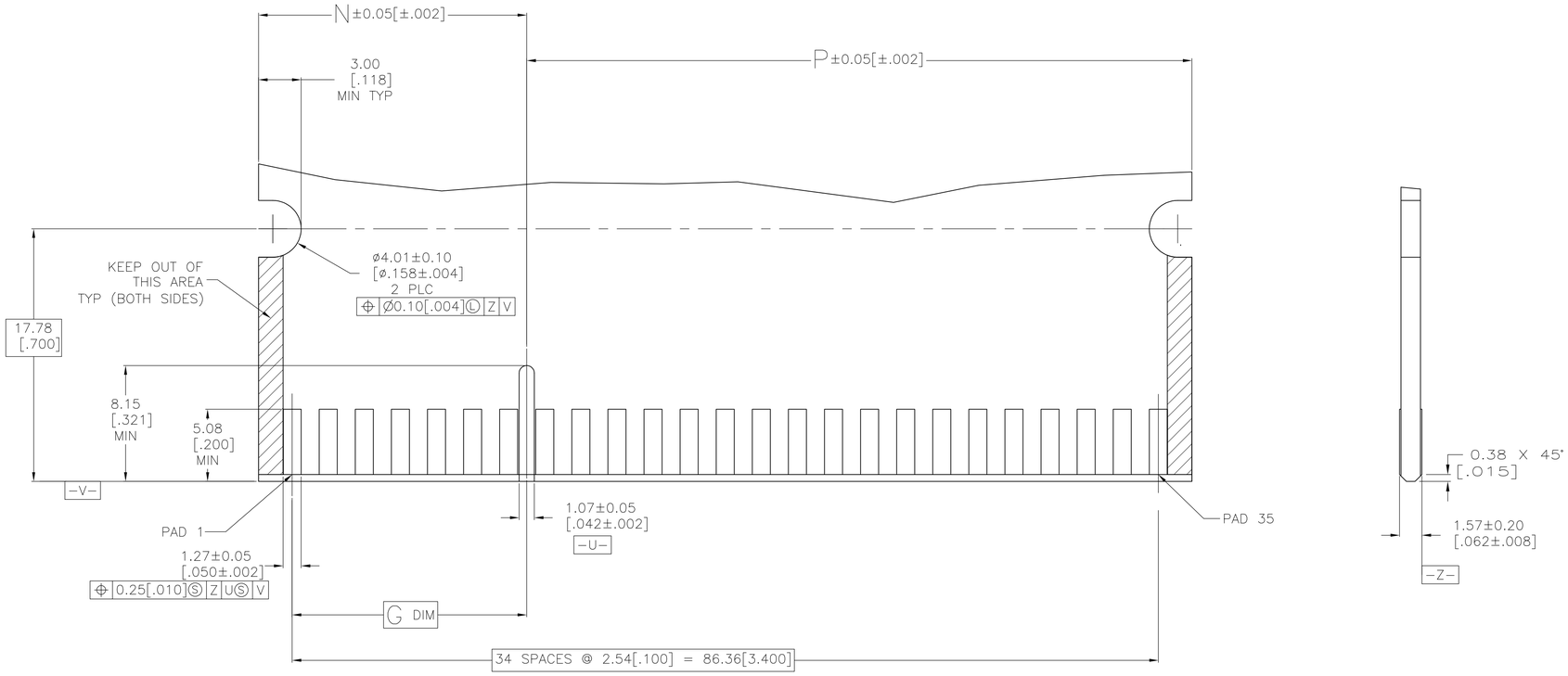

RECOMMENDED MATING BOARD EDGE CONFIGURATION

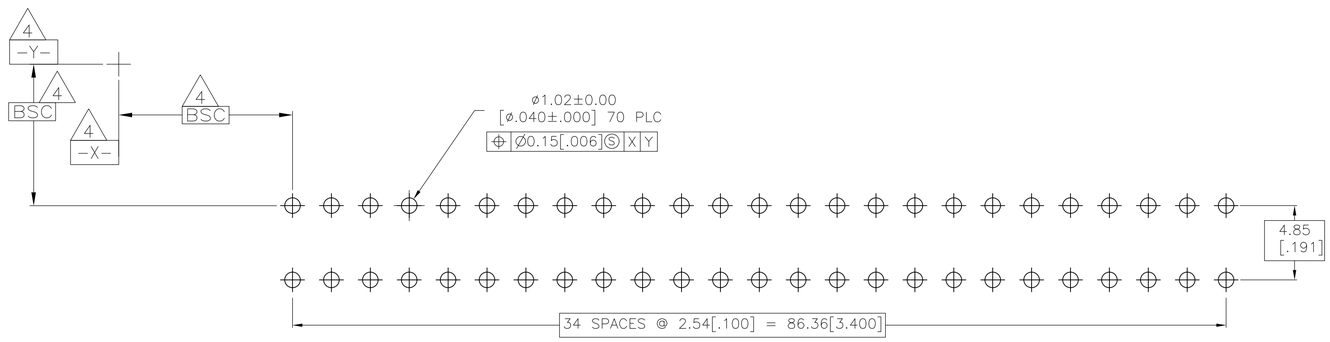

RECOMMENDED PC BOARD HOLE LAYOUT

THIS DRAWING IS A CONTROLLED DOCUMENT.

DIMENSIONS: mm [INCHES]

TOLERANCES UNLESS OTHERWISE SPECIFIED:

0 PLC	± –
1 PLC	± –
2 PLC	± 0.13 [.005]
3 PLC	± –
4 PLC	± –
ANGLES	± 2°

MATERIAL: SEE NOTE 1

FINISH: SEE NOTE 2

DWN MM/L.A.MAYER 31MAR2008
CHK A.W.FRANTUM 31MAR2008
APVD S.FLICKINGER 31MAR2008

PRODUCT SPEC 108–9039
APPLICATION SPEC 114–13018
WEIGHT —

Tyco Electronics

Tyco Electronics Corporation
Harrisburg, PA 17105–3608

NAME: CONNECTOR ASSEMBLY, STANDARD EDGE II, 2.54[.100] CENTERLINE

SIZE	CAGE CODE	DRAWING NO	RESTRICTED TO
A1	00779	C-5145459	—

CUSTOMER DRAWING

SCALE	SHEET	REV
4:1	2 OF 2	D