LOADING PATTERN MATING SIDE

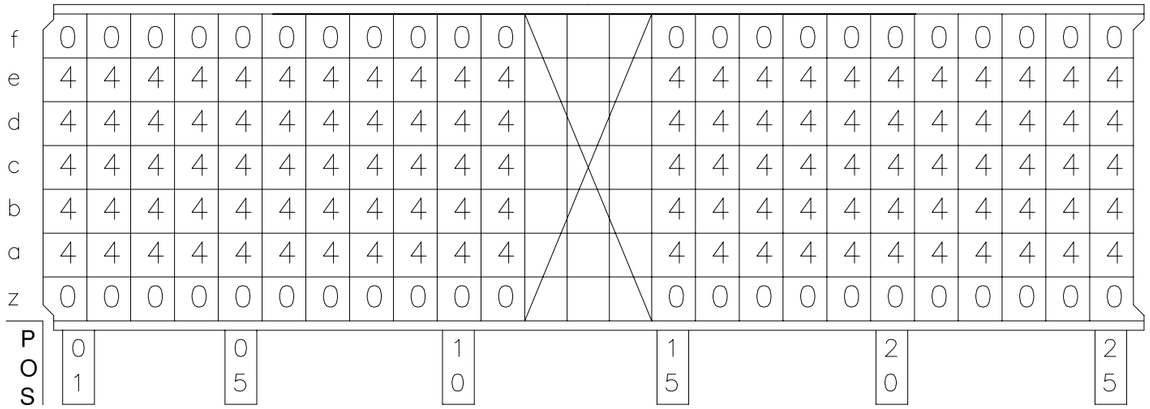

LOADED CONNECTOR ASSEMBLY
(FOR EXAMPLE)

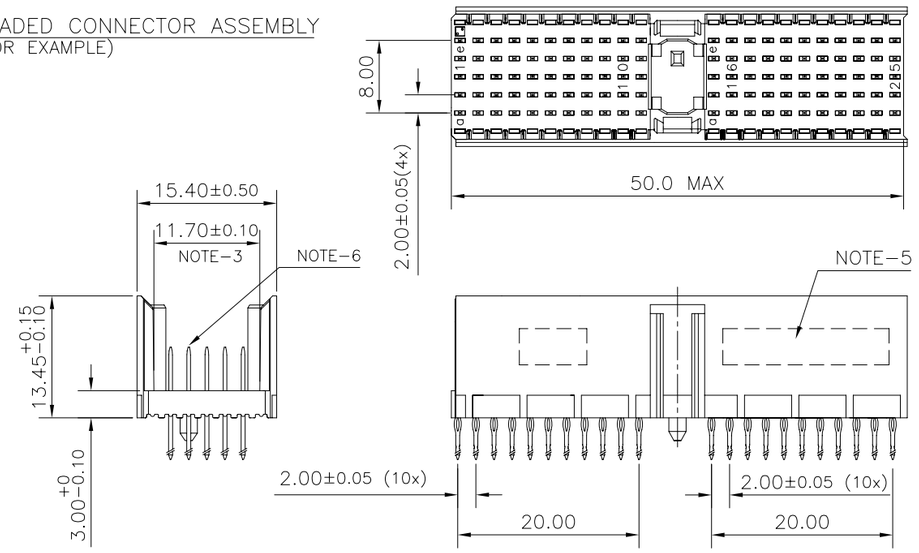

CONTACT OVERVIEW

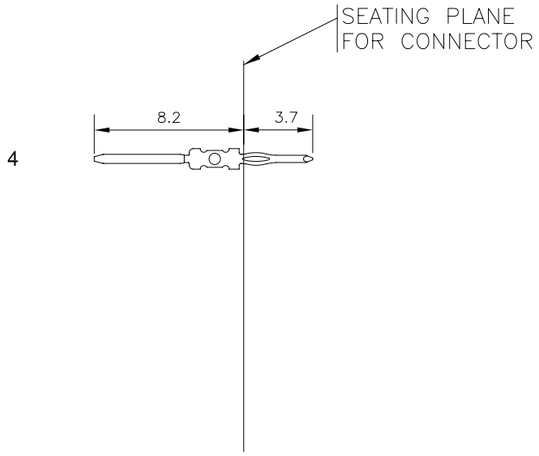

HM2P07PA5110 — LEAD FREE INDICATOR : LF = LEAD FREE (DIGIT 15 & 16); PLATING CODE (DIGIT 13 AND 14)

PLATING TABLE

CODE	PLATING	CONTACT AREA	TYPE OF TERMINAL	PERFORMANCE LEVEL
AA	0.75µ Au	GOLD OVER NICKEL PLATING.	SHORT TERMINAL EON PRESSFIT CONTACTS	IEC PERFORMANCE LEVEL 2 (250 mating cycles) or TELCORDIA CO
AB	1.25µ Au	GOLD OVER NICKEL PLATING.	SHORT TERMINAL EON PRESSFIT CONTACTS	TELCORDIA UE

LAY-OUT P.C.B.-HOLE

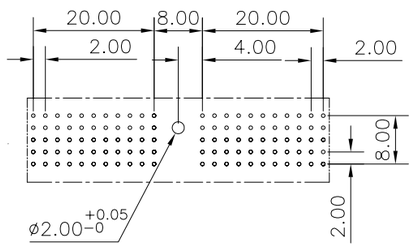

NOTES

1. THIS PRODUCT IS CSA APPROVED.
2. THIS PRODUCT IS UL RECOGNIZED.
3. MEASURED AT THE BOTTOM.
4. MATERIAL CONTACT: PHOSPHOR BRONZE
   HOUSING : CREAM WHITE GLASS FILLED POLYESTER UL-94V0
5. CONNECTOR PRINTED WITH P/N AND DATE CODE.
6. FOR ACTUAL CONTACT LOADINGS, SEE LOADING PATTERN MATING SIDE.
7. SHAPE OF CONNECTOR HOUSING CAN ALTER DEPENDING ON PRODUCTION LOCATION
8. THE PRODUCT (LF) MEETS EUROPEAN UNION DIRECTIVES AND OTHER COUNTRY REGULATIONS AS DESCRIBED IN GS-22-008
9. FOR RECOMMENDED PTH DIMENSIONS REFER DRAWING : BS, A , 201572 , 001

CATALOG NO: HM2P07PA5110----

mat'l. code: SEE NOTE 4				surface: ISO 1302	tolerance: ISO 406 ISO 1101	projection	product family: MILLIPACS
ltr	ecn no	dr	date	tolerances unless otherwise specified			title
A	I08-0097	AB	2008-08-05	angles	linear .0±0.2	MM	MILLIPACS 5+2R STR HDR PF CONN TYPE A
B	I09-0210	AB	2009-10-06		linear .00±0.1		
C	I09-0290	AB	2009-12-29	0°±1°		scale –	
D	I10-0018	MINI	2010-01-13	dr	MINI K VANDANATH 2008-08-05	FCI	dwg no: BS, C , 203032, 001 — sheet 1 of 1 — size A3
				engr	ALEX BABU 2008-08-05		
				chr	ALEX BABU 2008-08-05		
				appd	ALEX BABU 2008-08-05		type: Product Customer Drawing
sheet index	revision	D					
	sheet	1					

FCIconnect.com
Copyright FCI

form: A3

PDM: Rev:D STATUS: Released Printed: Jan 16, 2010