ITEM NO.	FORM	WIRE GAGE	DIM. "B"	DIM. "C"	DIM. "D"	DIM. "E"	DIM. "F"	DIM. "G"
460182541	CHAIN	22-24	.091±.012 (2.30±0.30)	.091±.016 (2.30±0.40)	.024 (0.60)	.071±.012 (1.80±0.30)	.065±.016 (1.65±0.40)	.016 (0.40)
460181541	CHAIN	18-20	.142±.012 (3.60±0.30)	.177±.016 (4.50±0.40)	.035 (0.90)	.075±.012 (1.90±0.30)	.091±.016 (2.30±0.40)	.020 (0.50)
460183541	CHAIN	16	.142±.012 (3.60±0.30)	.177±.016 (4.50±0.40)	.035 (0.90)	.091±.012 (2.30±0.30)	.106±.016 (2.70±0.40)	.024 (0.60)

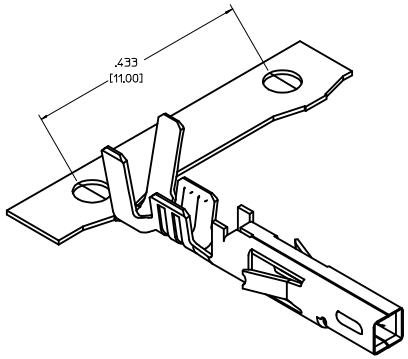

NOTES:

1. MATERIAL: COPPER ALLOY .0080/(0.203) THICK
2. FINISH:
   1. .000030/.00076 MIN. SELECT GOLD IN CONTACT AREA AND .000100/.00254 MIN. SELECT MATTE TIN IN CRIMP AREA OVER .000050/.00127 MIN. NICKEL OVERALL.

   PROPRIETARY MOLEX ADVANCED CONTACT SURFACE FINISH (CSF) IN CONTACT AREA.
3. PRODUCT SPECIFICATION: PS-46018-004
4. PACKAGING INFORMATION: PK-46018-001 FOR CHAIN TERMINALS
5. MATES WITH: MALE TERMINAL SERIES 46012 AND HEADERS 46011, 44068, 42404, 43810, 46014, 5569, 46015, 30070.
6. TERMINAL FOR USE WITH 5557, 42474, 44516, 43760, AND 30067 SERIES HOUSINGS.
7. WHEN TERMINALS ARE INSTALLED IN THE HOUSING, THE WIRES ARE TO BE DRESSED IN SUCH A MANNER TO ALLOW THE TERMINALS TO FLOAT FREELY IN THE POCKET.
8. THIS TERMINAL IS DESIGNED FOR SINGLE WIRE CRIMPING.
9. THIS PART CONFORMS TO CLASS B REQUIREMENTS OF COSMETIC SPEC PS-45499-002.

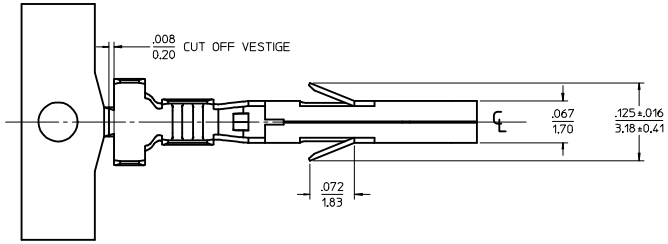

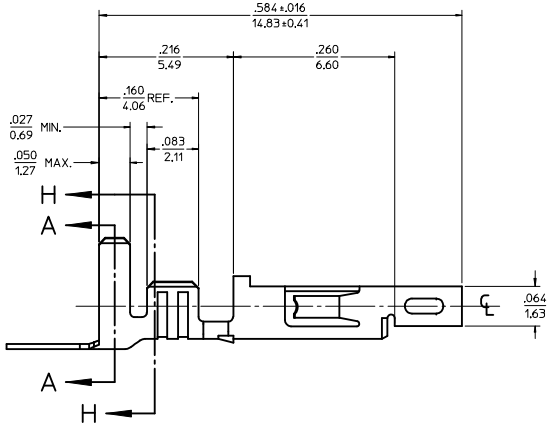

LEGEND

46018*54*

- BASE NUMBER
- WIRE GAGE
  - 1 = 18-20
  - 2 = 22-24
  - 3 = 16
- FORM
  - 1 = CHAIN

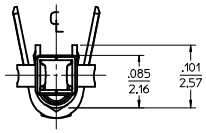

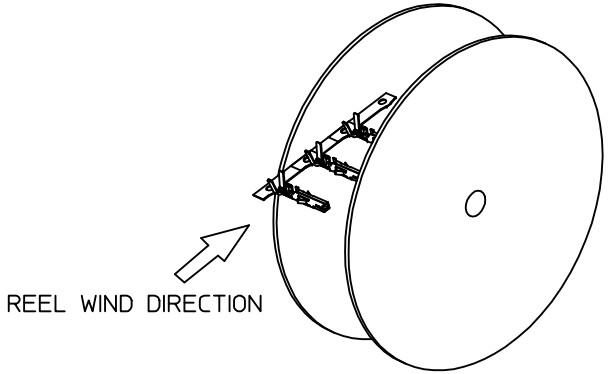

RoHS COMPLIANT

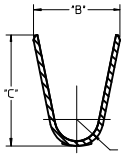

SECTION A-A

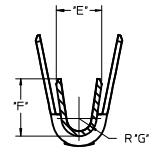

SECTION H-H

CHANGE TITLE	EC NO: UCP2013-5276	2014/04/08	DRWN:BANDERSON
		2014/04/04	CHKD:JBELL
		2014/04/09	APPR:FSMITH
DESCRIPTION			
REV	E1		

QUALITY SYMBOLS: 5=0, 4=0, 3=0

GENERAL TOLERANCES (UNLESS SPECIFIED)

	mm	INCH
4 PLACES	± ---	± ---
3 PLACES	± ---	± .010
2 PLACES	± 0.25	± .014
1 PLACE	± 0.36	± ---
0 PLACE	±	±

ANGULAR ±1/2°

DRAFT WHERE APPLICABLE MUST REMAIN WITHIN DIMENSIONS

DIMENSION STYLE: IN/MM

SCALE: 10:1

DESIGN UNITS: INCH

THIRD ANGLE PROJECTION

DRAWN BY	TGREGORI	DATE 2005-08-17
CHECKED BY	JCOMERCI	DATE 2005-08-17
APPROVED BY	JCOMERCI	DATE 2005-08-17

TITLE: FEMALE CRIMP TERMINAL MINI-FIT PLUS HIGH MATING CYCLE(46018)

molex

MATERIAL NO.: SEE CHART

DOCUMENT NO.: SD-46018-001

SHEET NO.: 1 OF 1

SIZE: D

THIS DRAWING CONTAINS INFORMATION THAT IS PROPRIETARY TO MOLEX INCORPORATED AND SHOULD NOT BE USED WITHOUT WRITTEN PERMISSION