THIS DRAWING IS UNPUBLISHED. RELEASED FOR PUBLICATION -,- .
© COPYRIGHT - BY TYCO ELECTRONICS CORPORATION. ALL INTERNATIONAL RIGHTS RESERVED.

LOC	DIST
A	66

REVISIONS

P	LTR	DESCRIPTION	DATE	DWN	APVD
	B	ECR-09-010086	5-2009	MY	GB

PART NUMBER	REV	FIRST USED	TERMINATOR	FEED TYPE	DESCRIPTION
1528210-1	B	-	LEADMAKER	MECH POST FEED	CUTS CARRIER
1528210-2	B	-	BENCH	MECH PRE FEED	CUTS CARRIER
1528210-6	B	-	LEADMAKER	MECH POST FEED	CONTINUOUS CARRIER
7-1528210-1	B	-	LEADMAKER	MECH POST FEED	-1 AND SPARE PARTS
7-1528210-2	B	-	BENCH	MECH PRE FEED	-2 AND SPARE PARTS
7-1528210-6	B	-	LEADMAKER	MECH POST FEED	-6 AND SPARE PARTS
7-1528210-7	A	-	-	-	SPARE PARTS KIT

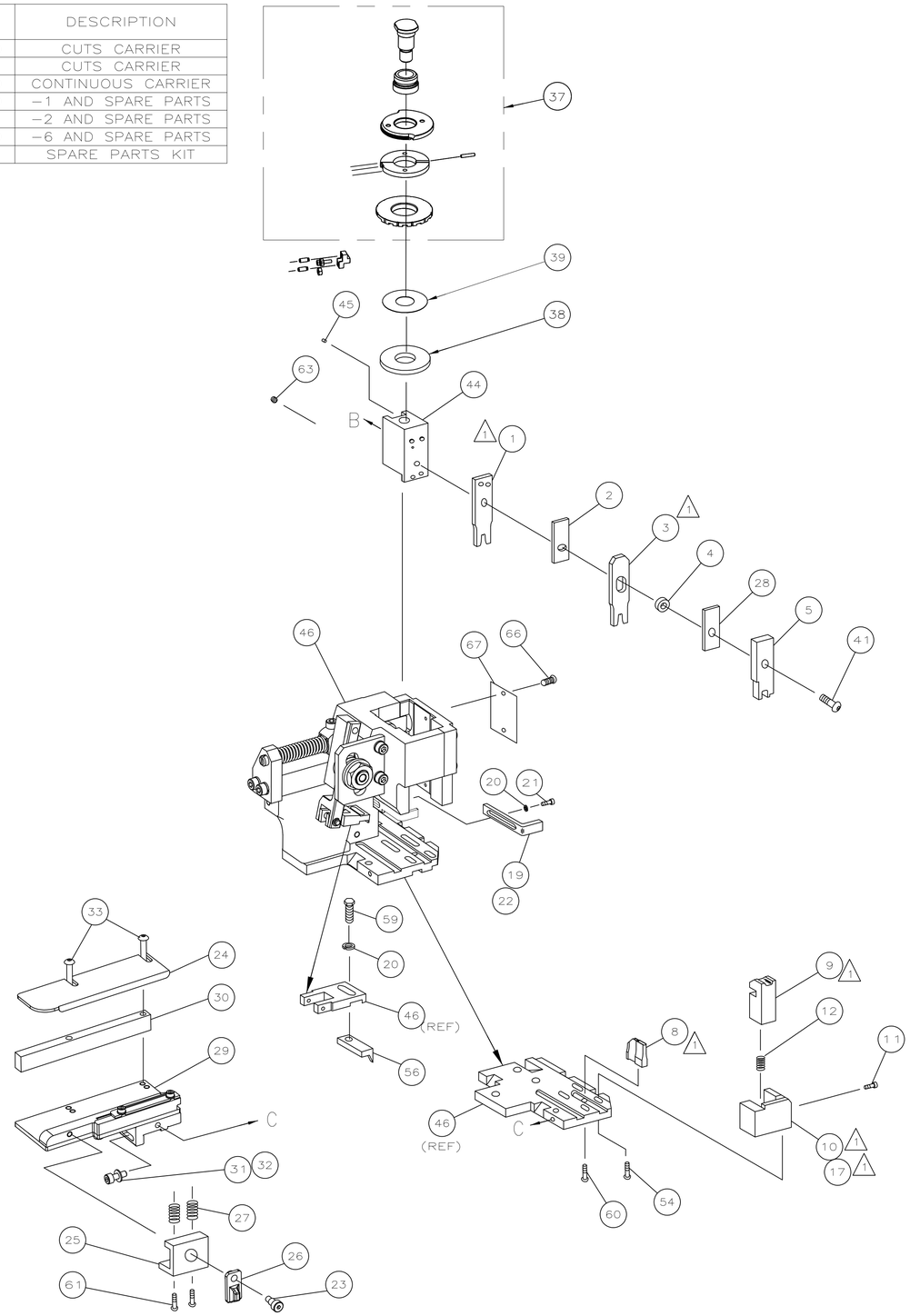

CRIMP DATA MOLEX TERMINAL MOLEX CRIMP SPECS

TERMINAL NAME: MOLEX MINI SPOX CRIMP RECEPTACLE.

CRIMP	SIZE	TYPE	RANGE
WIRE	1.40 [.055 IN]	F	28-22 AWG
INSUL	1.78 [.070 IN]	F	1.15-1.90 [.045-.075 IN]

WIRE STRIP LENGTH 2.60-3.20 [.102-.126 IN]

APPL INSTRUCTION 408-8322 & 408-8490

TERMINAL MOLEX DOC. NO. PS-5102-001
APPL SPEC & MOLEX CRIMPING SPEC.

FEED 7.11 [.280 IN]

TERMINALS APPLIED

AMP TERM PN	MFR TERM PN	-	-	-
1572094-1	08-70-0058	-	-	-
1572094-2	08-70-0056	-	-	-
-	-	-	-	-
-	-	-	-	-
-	-	-	-	-
-	-	-	-	-
-	-	-	-	-

WIRE SIZE mm² AWG	CRIMP HEIGHT *	REF SETTING *
22 AWG	0.85 -0.03/+0.02[.033 REF IN]	C0
24 AWG	0.78 -0.03/+0.02[.031 REF IN]	C4
26 AWG	0.73 -0.03/+0.02[.029 REF IN]	C6
28 AWG	0.69 -0.03/+0.02[.027 REF IN]	D0
-	-	-
-	-	-
-	-	-
-	-	-
-	-	-
-	-	-
-	-	-
-	-	-
-	-	-
-	-	-
-	-	-

SET UP GAGE	LAYOUT
458637-3	L1426327

1. RECOMMENDED SPARE PARTS.
2. GREASE RAM, CAM, CAM FOLLOWER AND FEED ROD LIGHTLY.
3. LUBRICATE DAILY PER THE APPLICATOR INSTRUCTION SHEET SUPPLIED WITH THE APPLICATOR.

VIEW B ROTATED 180°

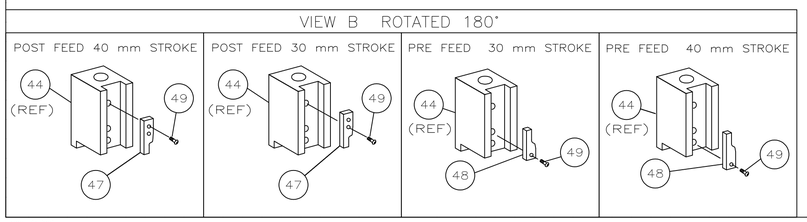

* WARNING:
ON INSTALLATION, SET WIRE DISC TO LARGEST WIRE SIZE SETTING. USE OF SETTINGS BELOW MIN REQUIRED CRIMP HEIGHT SETTING WILL CAUSE DAMAGE TO CRIMP TOOLING.

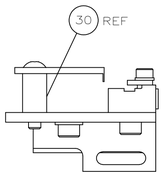

ITEM 30
SHORT POSITION

									ITEM NO
									73
-	1	1	1	1	1	1	1528210	PRINT, APPLICATOR LOG SHEET	72
-	1	1	1	1	1	1	1338705-3	DOCUMENTATION PACKAGE	71
									70
									69
									68
-	1	1	1	1	1	1	461264-5	PLATE, IDENTIFICATION	67
-	2	2	2	2	2	2	21017-2	SCR,DRIVE(#2x.19)ID PLATE	66
									65
									64
-	1	1	1	1	1	1	3-18031-0	SCR,SKT SET(M6X6)RAM	63
									62
-	2	2	2	2	2	2	2-18032-5	SCR,SET(M5X20)DRAG	61
-	1	1	1	1	1	1	18024-7	SCR,BHC(M4X10)ANVIL	60
-	1	1	1	1	1	1	5-18022-2	SCR,HEX(M4X8)FEED FINGER	59
									58
									57
-	1	1	1	1	1	1	1338685-1	PAWL, FEED	56
									55
-	2	2	2	2	2	2	18024-8	SCR,BHC(M4x12)SHEAR HOLDER	54
									53
									52
									51
									50
-	1	1	1	1	1	1	18024-3	SCR,BHC(M3X10)CAM	49
-	-	1	-	-	1	-	1338675-1	CAM, PRE FEED 30 & 40 mm ST	48
-	1	-	1	1	-	1	1338676-1	CAM, POST FEED 30 & 40 mm ST	47
-	1	1	1	1	1	1	1320999-3	APPLICATOR BASIC SUBASSY	46
-	1	1	1	1	1	1	690191-1	PLUG, NYLON	45
-	1	1	1	1	1	1	1338660-1	RAM	44
									43
									42
-	1	1	1	1	1	1	2-18024-6	SCR,BHC(M8X25)RAM	41
									40
-	1	1	1	1	1	1	690125-1	SHIM SUBASSY	39
-	1	1	1	1	1	1	469367-8	SPACER, FINE ADJUST	38
-	1	1	1	1	1	1	879103-3	FINE ADJUST HEAD SUBASSY	37
									36
									35
									34
-	2	2	2	2	2	2	1-18024-0	SCR,BHC(M4X20)STRIP GUIDE	33
-	1	1	1	1	1	1	18027-2	WASHER, FLAT(M4)	32
-	1	1	1	1	1	1	1-18023-2	SCR,SKT CAP(M4X12)MOUNT BLOCK	31
-	1	1	1	1	1	1	1320908-9	SPACER, STRIP GUIDE	30
-	1	1	1	1	1	1	1633073-3	STRIP GUIDE PLATE ASSY	29
-	1	1	1	1	1	1	1-455888-0	SPACER, FRONT SHEAR DEP	28
-	2	2	2	2	2	2	1-22284-0	SPRING, DRAG	27
-	1	1	1	1	1	1	356835-1	LEVER, DRAG RELEASE	26
-	1	1	1	1	1	1	240792-1	DRAG, TERMINAL	25
-	1	1	1	1	1	1	1320928-1	PLATE, STRIP GUIDE	24
-	1	1	1	1	1	1	980371-4	SCR,SHC SHLD	23
-	1	-	1	1	-	1	690472-2	STRIPPER	22
-	1	1	1	1	1	1	1-18023-1	SCR,SHC(M4X10)STRIPPER	21
-	2	2	2	2	2	2	18025-2	WASHER,LOCK(M4)STRIPPER	20
-	-	1	-	-	1	-	690472-1	STRIPPER	19
									18
1 -	1	-	-	1	-	-	1338684-1	HOLDER, SHEAR, FRONT (NO-CUT)	17
									16
									15
									14
									13
-	1	1	1	1	1	1	3-22280-3	SPRING, SHEAR	12
-	1	1	1	1	1	1	356885-4	STOP, SHEAR	11
-	-	1	1	-	1	1	1320921-1	HOLDER, SHEAR, FRONT (CUT)	10
1 -	1	1	1	1	1	1	462006-1	SHEAR, FLOAT (FRONT)	9
1	2	2	2	1	1	1	1-1333228-0	ANVIL	8
									7
									6
-	1	1	1	1	1	1	2-455889-0	DEPRESSOR, SHEAR (FRONT)	5
-	1	1	1	1	1	1	2-238011-0	SPACER, BLOCK CRIMPER	4
1	2	2	2	1	1	1	7-456134-2	CRIMPER, INSULATION	3
-	1	1	1	1	1	1	455888-5	SPACER, CRIMPER	2
1	2	2	2	1	1	1	2-456402-9	CRIMPER, WIRE	1
	-77	-76	-72	-71	-6	-2	-1	PART NO	DESCRIPTION

QTY REQD PER ASSY

PARTS LIST

THIS DRAWING IS A CONTROLLED DOCUMENT.

DIMENSIONS: INCHES

TOLERANCES UNLESS OTHERWISE SPECIFIED:
0 PLC ± -
1 PLC ± -
2 PLC ± -
3 PLC ± -
4 PLC ± -
ANGLES ± -

MATERIAL -
FINISH -

DWN M.CLIFFORD 07JUL03
CHK -
APVD F.RACKHURST 07JUL03
PRODUCT SPEC -
APPLICATION SPEC -
WEIGHT -

Tyco Electronics
Tyco Electronics Corporation
Harrisburg, PA 17105-3608

NAME FINE ADJ SIDE FD HD-I APPL

SIZE A1 | CAGE CODE 00779 | DRAWING NO C-1528210 | RESTRICTED TO -

CUSTOMER DRAWING | SCALE - | SHEET 1 OF 1 | REV B

4805 (1/08)

04MAY2009 1:02pm